EN

GALVAMET

THE ART OF AIR

Start

INSTRUCTIONS FOR INSTALLATION, USE AND MAINTENANCE

GALVAMET
THE ART OF AIR

1N 220-240V / 50-60Hz

2N 220-240V / 50-60Hz

3N 380-415V / 50-60Hz

Summary

I GENERAL 4
II SAFETY INSTRUCTIONS AND WARNINGS 5
III INSTALLATION 10
III.1 AIR TREATMENT 10
III.2 PRELIMINARY INDICATIONS 11
III.3 INSTALLATION 13
III.3.a INSTALLATION OF THE INDUCTION HOB 15
III.3.b CONSTRUCTION INSTRUCTIONS - **OUTLET ON PLINTH** 19
III.3.c CONSTRUCTION INSTRUCTIONS - **REAR DISCHARGE** 20
III.3.d ASSEMBLING THE AIR VENTING PIPE 24
III.4 ELECTRICAL CONNECTION 24
IV OPERATION 27
IV.1 DESCRIPTION OF THE EXTRACTING INDUCTION HOB 27
IV.1.a TECHNICAL CHARACTERISTICS 27
IV.1.b MAIN CONTROL CHARACTERISTICS OF THE EXTRACTOR HOB 29
IV.2 CONTAINERS FOR COOKING 30
IV.2.a QUALITY OF THE PANS 30
IV.2.b DIMENSIONS OF PANS 30
IV.3 INDUCTION HOB 31
IV.3.a COOKING ZONE DISPLAY 31
IV.3.b HOB CHARACTERISTICS 32
IV.3.c HOB CONFIGURATION 33
IV.3.d HOB OPERATION 34
IV.4 EXTRACTION 40
IV.4.a PRELIMINARY INDICATIONS 40
IV.4.b EXTRACTION OPERATION 40
V MAINTENANCE AND CLEANING 48
V.1 CLEANING THE EXTRACTOR INDUCTION HOB 48
VI TROUBLESHOOTING 54
VI.1 ERRORS / TROUBLESHOOTING 54
VI.2 ASSISTANCE SERVICE 56
VII DECOMMISSIONING 57
VII.1 DECOMMISSIONING 57
VII.2 DISASSEMBLY 57
VII.3 PROTECTING THE ENVIRONMENT 57
VII.4 DISPOSAL 57
VIII REFERENCED TECHNICAL STANDARDS 58

GENERAL

These user instructions describe the appliance and its use. This instruction manual forms an integral part of the appliance, therefore it must be retained and kept with the appliance at all times, even in the event of transfer to another owner, or transfer to another installation site.

The appearance of the appliance may differ from the illustrations shown in this manual; the instructions for installation, use and maintenance remain the same.

PRODUCT COMPLIANCE

This appliance has been designed and manufactured in compliance with the essential requirements relating to safety, health protection and electromagnetic compatibility set out in the applicable European legislation.
Where applicable, the appliance complies with the following European Directives and Regulations:

- **Low Voltage Directive (LVD) 2014/35/EU**
- **Electromagnetic Compatibility (EMC) Directive 2014/30/EU**
- **RoHS Directive 2011/65/EU and subsequent amendments**
- **Waste Electrical and Electronic Equipment (WEEE) Directive 2012/19/EU**
- **Applicable European Regulations on Ecodesign and Energy Labelling**

The EU Declaration of Conformity is available from the manufacturer upon request.

The manufacturer strives for continuous improvements.

For this reason, the text and illustrations in this manual may be changed without notice.

II SAFETY INSTRUCTIONS AND WARNINGS

WARNING SYMBOL AND SIGNAL WORDS

Type and source of danger
Consequences of non-compliance
->Measures to minimise risk
Notes:

- Warning symbols draw attention to hazards that may result in injury, death or property damage.
- The signal word indicates the severity of the hazard.

Meaning of the warning symbols and signal words:

Warning symbol	Signal word	Risk
	DANGER	Indicates an imminently hazardous situation which, if not avoided, will result in death or serious injury.
	WARNING	Indicates a potentially hazardous situation which, if not avoided, could result in death or serious injury.
	CAUTION	Indicates a potentially hazardous situation which, if not avoided, may result in minor or moderate injury or property damage.

- The appliance is manufactured according to the safety standards in force.
- The appliance must only be used for its intended purpose, i.e. as an extractor induction hob, for the cooking of food and the extraction of cooking fumes, installed in domestic kitchens.
- The manufacturer disclaims all liability for any damage caused to persons, animals or property, installation and maintenance errors, or misuse.
- Before connecting the appliance to the mains, check the serial number plate (located on the lower part of the appliance) to make sure that the voltage and power correspond to those of the mains and that the connection socket is suitable. If in doubt, contact a qualified electrician.

DANGER - Electric shock hazard. Failure to disconnect the appliance may result in electric shock, serious injury or death. ->Before any cleaning or maintenance operation or in the event of thunderstorms, disconnect the appliance by setting the main system switch to "off" (Fig.2.1) or by unplugging it (Fig.2.2).

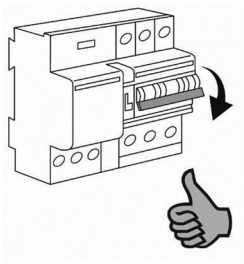
Fig. 2.1

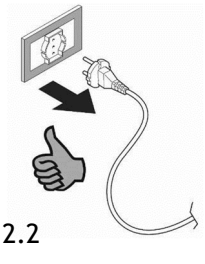
Fig. 2.2

- ⚠ **CAUTION - Burn hazard.** When the extractor hob is in operation, adjacent areas to the induction cooking zones can become hot. ->Do not touch hot pots or surfaces during operation or immediately afterwards.
- ⚠ **WARNING - Fire Hazard.** Failure to clean the appliance may result in a fire hazard. ->Clean the appliance regularly.
- The appliance must not be cleaned with steam or high-pressure cleaners.
- ⚠ **CAUTION - Risk of injury and appliance damage.** Do not insert any objects through the central grille. ->Keep the central grille free from foreign objects at all times. (Fig.2.3).

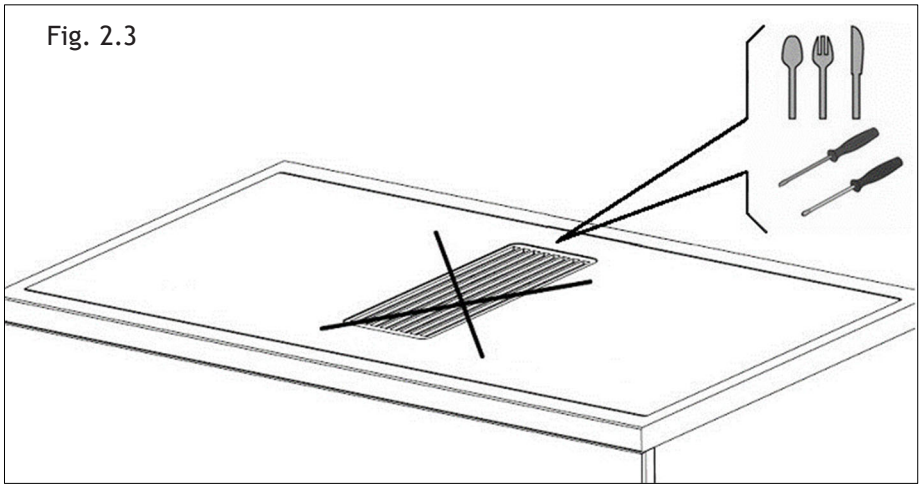
Fig. 2.3

- ⚠ **WARNING - Access hazard.** Do not use the appliance if the central grille is removed. ->This may provide direct access to the suction area, creating a risk of injury or damage.
- Do not use the appliance to heat the room.
- Pay attention to the electrical connection of other appliances in the immediate vicinity that must not come into contact with the hot appliance.
- It is forbidden to pull, detach or twist the electrical cables exiting the appliance, even if it is disconnected from the power supply.
- Cooker hoods and other cooking fume extractors can adversely affect the safe operation of appliances that burn gas or other fuels (including those in other rooms) due to the backflow of flue gases. These gases have the potential to cause carbon monoxide poisoning. After installing a cooker hood or other kitchen fume extractor, flow gas appliances should be tested for function by a competent person to ensure that no backflow of flue gases occurs.
- ⚠ **WARNING - Fire Hazard.** Open flames beneath the appliance may cause a fire. ->Do not cook with naked flames beneath the appliance.

To avoid any unwanted interference on the control panel (Touch Control “TC”), position suitable pans centred on the points marked on the glass ceramic surface.

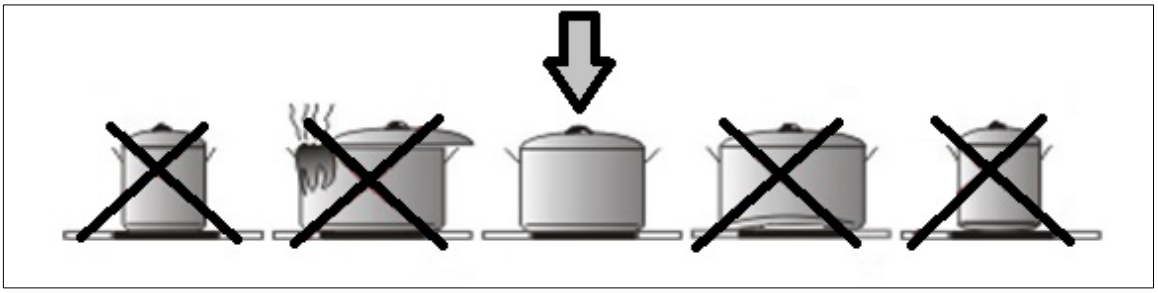

Precautions before use

· Unpack all the materials.

· The installation and connection of the appliance must be performed by authorised specialists. The manufacturer cannot be held responsible for damage caused by installation or connection errors.

· The appliance must be correctly installed in a kitchen unit and on a suitable and approved worktop before use.

· This appliance is intended solely for the cooking of food and excludes any other domestic, commercial or industrial use.

· Remove all labels and stickers from the ceramic glass.

· Do not change or alter the appliance.

· The hob cannot be used as a free-standing or work surface.

· The appliance must be earthed and wired in accordance with the local standards.

· Do not use any extension cord to connect it or multiple sockets.

· The appliance must not be used on top of a non-ventilated oven, a dishwasher or tumble dryer: steam can damage electronic appliances.

· The appliance is not designed to be operated using an external timer or separate remote control system.

Use of the appliance

· After use, switch off the hob using its control device and do not rely on the pot detection function.

· Always switch off the cooking zones after use.

· Take particular care when cooking with oils or fats that could catch fire quickly.

· Be careful not to burn yourself during or after using the appliance.

· Make sure that there are no cables from any appliance, fixed or mobile, in contact with the glass or hot pot.

· ⚠ **CAUTION - Electromagnetic interference hazard.** Magnetic objects (e.g. credit cards, mobile phones, calculators) may be affected when placed near the appliance in operation.
->Keep magnetic and electronic devices away from the operating hob.

· ⚠ **CAUTION - Burn hazard.** Metallic objects placed on the hob may become hot. ->Do not place metal objects such as knives, forks, spoons or lids on the cooking surface during operation.

· In general, do not place metal objects except for heating containers on the glass surface. In the event of unexpected or residual overheating, these can heat up, melt or even burn.

· Never cover the appliance with a cloth or protective sheet. This could become very hot and catch fire.

· This appliance may be used by children aged 8 years or over and by persons with reduced physical, sensory or mental capabilities or who lack experience and knowledge only if they have been supervised or instructed in safe use of the appliance and understand the dangers.

· Children must not play with the appliance.

· Cleaning and maintenance by the user must not be performed by children without supervision.

· ⚠ **WARNING - Burn hazard.** Keep children away from the appliance during operation, as accessible parts may become very hot. ->Hot surfaces can cause burns if touched during or immediately after use.

Precautions to avoid damaging the appliance

· Rough pan bases or damaged pans (not enamelled cast iron pans) can damage the ceramic glass.

· Sand or other abrasive materials can damage the ceramic glass.

· Avoid dropping objects, even small ones, on the ceramic glass.

· Do not strike the edges of the glass with pans.

· ⚠ **CAUTION - Ventilation requirement.** Make sure that the ventilation of the appliance works according to the manufacturer's instructions. ->Ensure adequate ventilation during installation and operation of the appliance.

· Do not place or leave empty pans on glass ceramic hobs.

· Sugar, synthetic materials or aluminium foil must not come into contact with the heating zones. These can cause breakage or other alterations of the glass ceramic surface when cooling. Remove them immediately from the hot heating zone (be careful: do not burn yourself).

· ⚠ **WARNING - Fire hazard.** Unattended cooking with fat or oil can be dangerous and cause fires. ->Cooking with fat or oil must not be left unattended.

· ⚠ **WARNING - Fire hazard.** Unattended cooking may result in a fire. ->Cooking must be supervised. A short-term cooking process must be monitored constantly.

· ⚠ **WARNING - Fire hazard.** Objects placed on the cooking surface may overheat and cause a fire. ->Do not place objects on the cooking surface.

· ⚠ **CAUTION - Burn hazard.** Hot containers must never be placed on the control panel. ->Always place hot cookware on suitable heat-resistant surfaces away from the control area.

· Adequate ventilation must be ensured on the front and back of the unit so that the air can circulate.

· ⚠ **CAUTION - Ventilation requirement.** The presence of a drawer under the built-in appliance requires sufficient clearance between the contents of the drawer and the underside of the induction hob (30 mm). ->Ensure that this clearance is sufficient; this is essential to ensure correct ventilation.

· Never place flammable objects (e.g. sprays) in the drawer located under the glass ceramic hob. Any cutlery drawers must be heat-resistant.

Precautions in case of equipment fault

· If a defect is found, switch off the appliance and interrupt the power supply.

· ⚠ **WARNING - Electric shock hazard.** A broken, cracked or fractured ceramic glass surface may cause electric shock or injury. → If the ceramic glass is damaged, disconnect the appliance.

· Repairs must be performed by specialists. Do not open the appliance yourself.

Other protections

· Make sure that the pot/container is always centred on the cooking zone marked on the hob.

· ⚠ **CAUTION - Magnetic field hazard.** Wearers of pacemakers must be aware that the magnetic field may affect the operation of the device. ->Pacemaker wearers should seek medical advice or consult the retailer for further information.

· Do not use containers made of aluminium or synthetic material: they could melt in the cooking zones that are still hot.

· ⚠ **CAUTION - Structural damage hazard**. Do not sit, stand or place excessive loads on the glass surface. ->Excessive load may cause damage to the glass hob.

· ⚠ **CAUTION - Surface damage hazard.** Do not drag cookware across the glass surface. ->Always lift pans when repositioning them to prevent scratches and protect the glass surface.

⚠ **WARNING - Fire Hazard.** Attempting to extinguish a fire with water may cause the fire to spread. ->Never attempt to extinguish a fire with water. Switch off the appliance and cover the flame, e.g. with a lid or fire blanket.

IMPORTANT: THE USE OF POOR QUALITY COOKWARE OR ANY INDUCTION ADAPTER PLATE FOR NON-MAGNETIC COOKWARE WILL VOID THE WARRANTY. IN THIS CASE, THE MANUFACTURER CANNOT BE HELD RESPONSIBLE FOR ANY DAMAGE CAUSED TO THE HOB AND/OR TO THE SURROUNDING ENVIRONMENT.

III INSTALLATION

III.1 AIR TREATMENT

This extraction system allows the treatment of cooking fumes. The system can be used in extraction or filtering mode (Long-Life odour filter kit or kit with plasma filter, available separately).

Extracting (external evacuation). Fumes from the kitchen are expelled outside through the pipe (not supplied with the appliance) connected to the motor exhaust fitting.

	WARNING - Flue gas hazard. The pipe must never be connected to combustion exhaust ducts (stoves, boilers, burners, etc.). ->Ensure the pipe is connected only to a suitable ventilation system in accordance with local regulations.

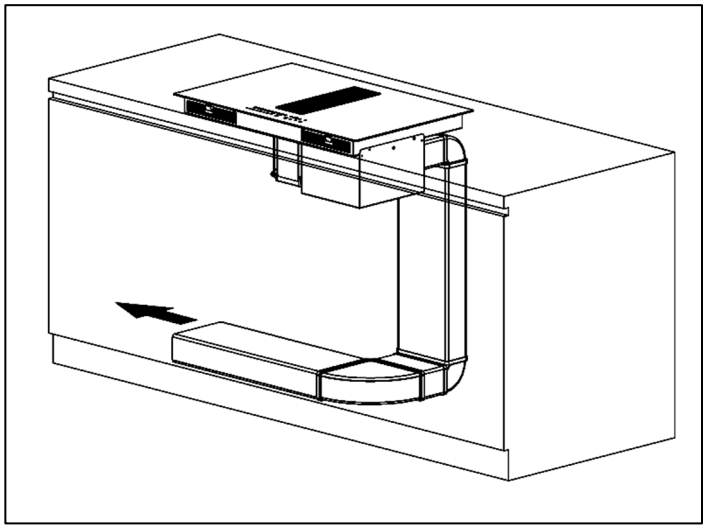

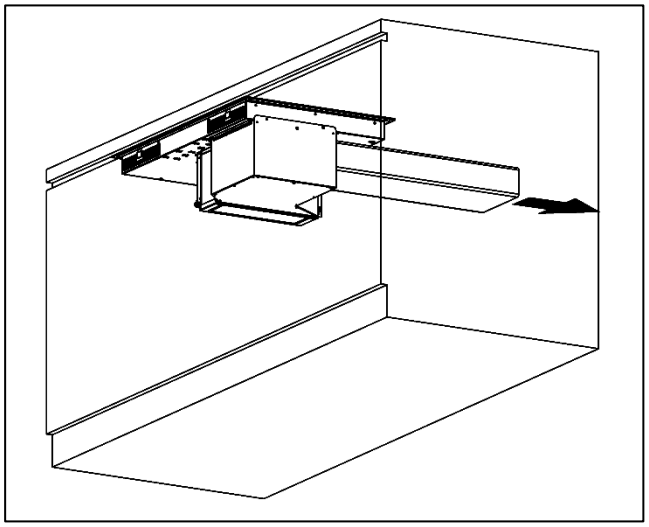

The use of long pipes, with many bends, corrugated and with a smaller section than that of the motor outlet will cause a decrease in extraction performance and a possible increase in noise.

Filtering (internal recycling). The fumes pass through the Long-Life odour filter (which can be ordered separately as an accessory) to be purified and recycled in the kitchen environment.

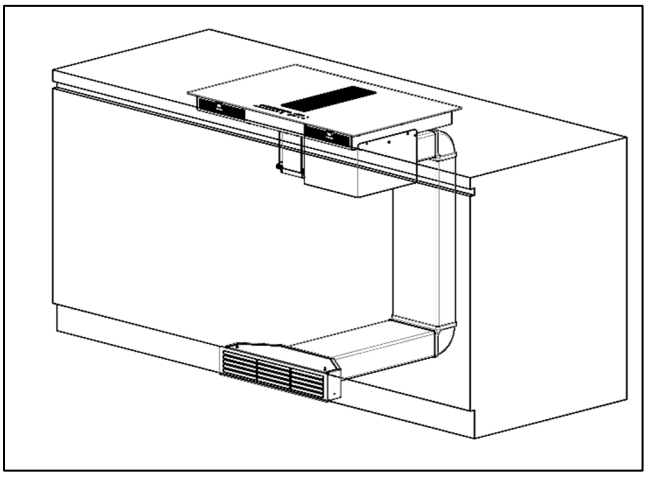

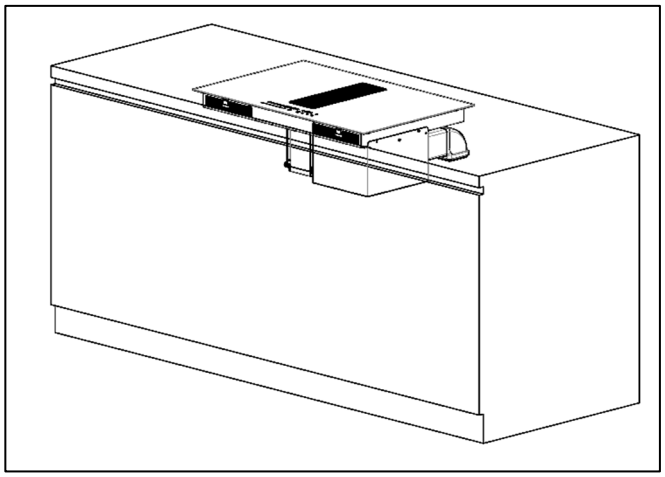

III.2 PRELIMINARY INDICATIONS

Read the entire instruction booklet before installing and using the equipment.

For the installation of the appliance, safety equipment and a series of devices are required as shown in Fig.3.2.1.

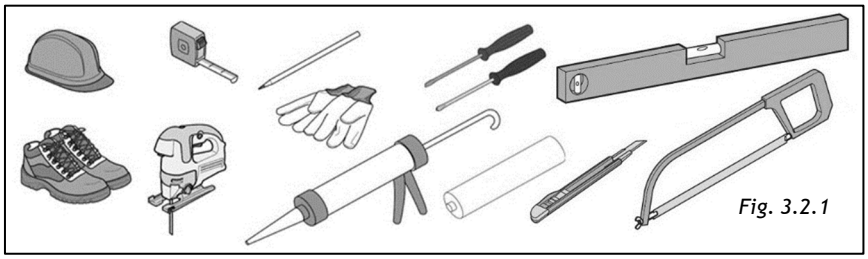

Fig. 3.2.1

The extraction hob is equipped with all the fixings necessary for its installation and suitable for most units.

Note: check the minimum dimensions of the unit for installation considering the overall dimensions of the appliance indicated in Fig. 3.2.2 and Fig. 3.2.3.

Fig. 3.2.2

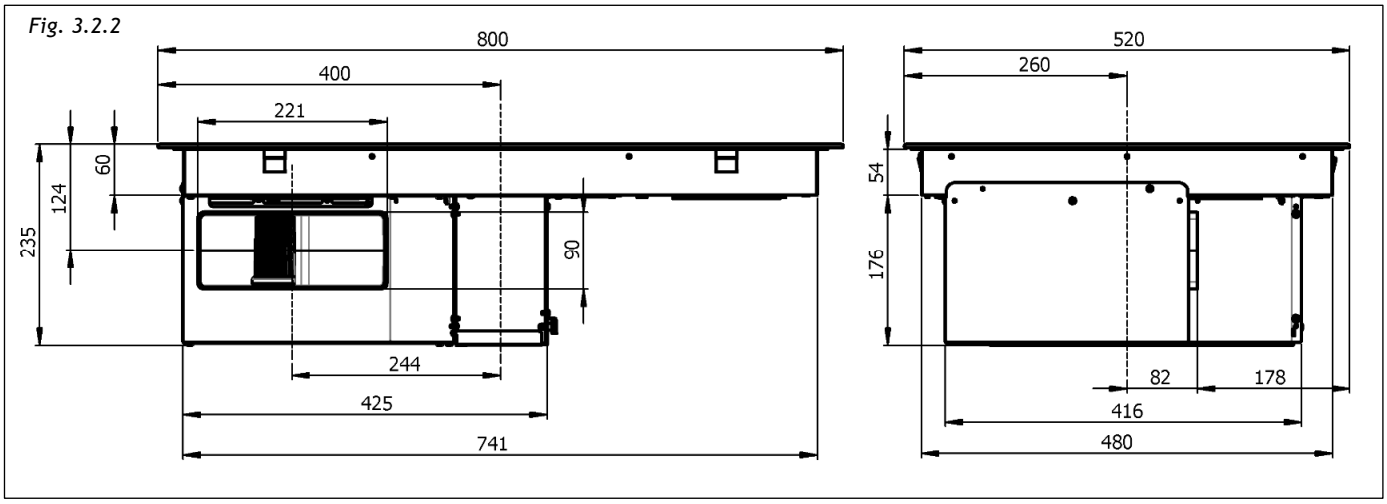

Fig. 3.2.3

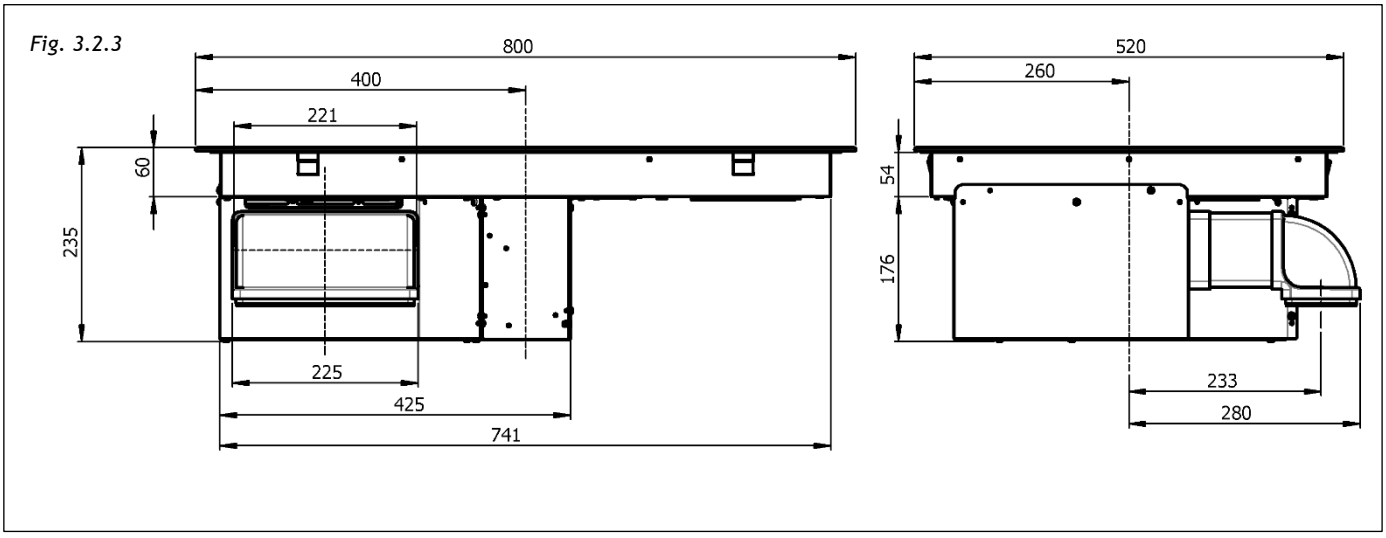

⚠ **CAUTION - Material damage hazard.** The unit cladding must be treated with heat-resistant adhesives resistant up to 100°C; otherwise, due to insufficient thermal resistance, its shape and colour may change. ->Use only adhesives suitable for temperatures up to 100°C.

Ideally the appliance must be installed without tall units or walls on both sides (Fig.3.2.4-A). The presence of tall units or walls is only permitted on one side of the appliance (Fig.3.2.4-B and Fig.3.2.4-C).

⚠ **WARNING - Fire Hazard.** Units or walls higher than the appliance on both sides are prohibited (Fig.3.2.4-D). -> Ensure sufficient clearance around the appliance in accordance with installation requirements (Fig.3.2.4-D). Wooden decorative slats must not be installed.

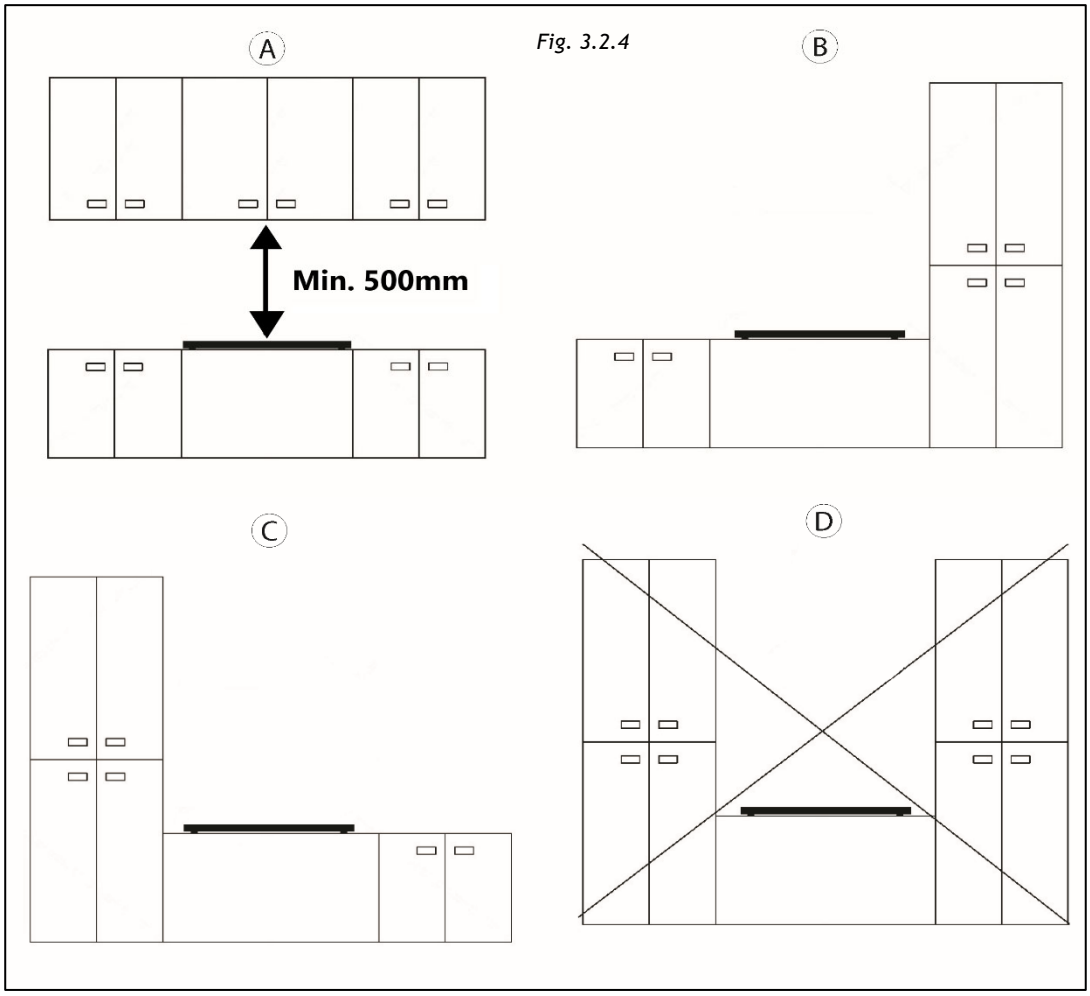

Fig. 3.2.4

We recommend installing the appliance only after having assembled the wall unit to avoid any damage to the glass top.

The safety space between the hob and any unit positioned above it must respect a minimum distance of 500 mm. (Fig. 3.2.4-A).

III.3 INSTALLATION

Upon opening the box, the installer will be presented with the elements shown below, to be installed according to the method described in these pages. Front view (Fig. 3.3.1):

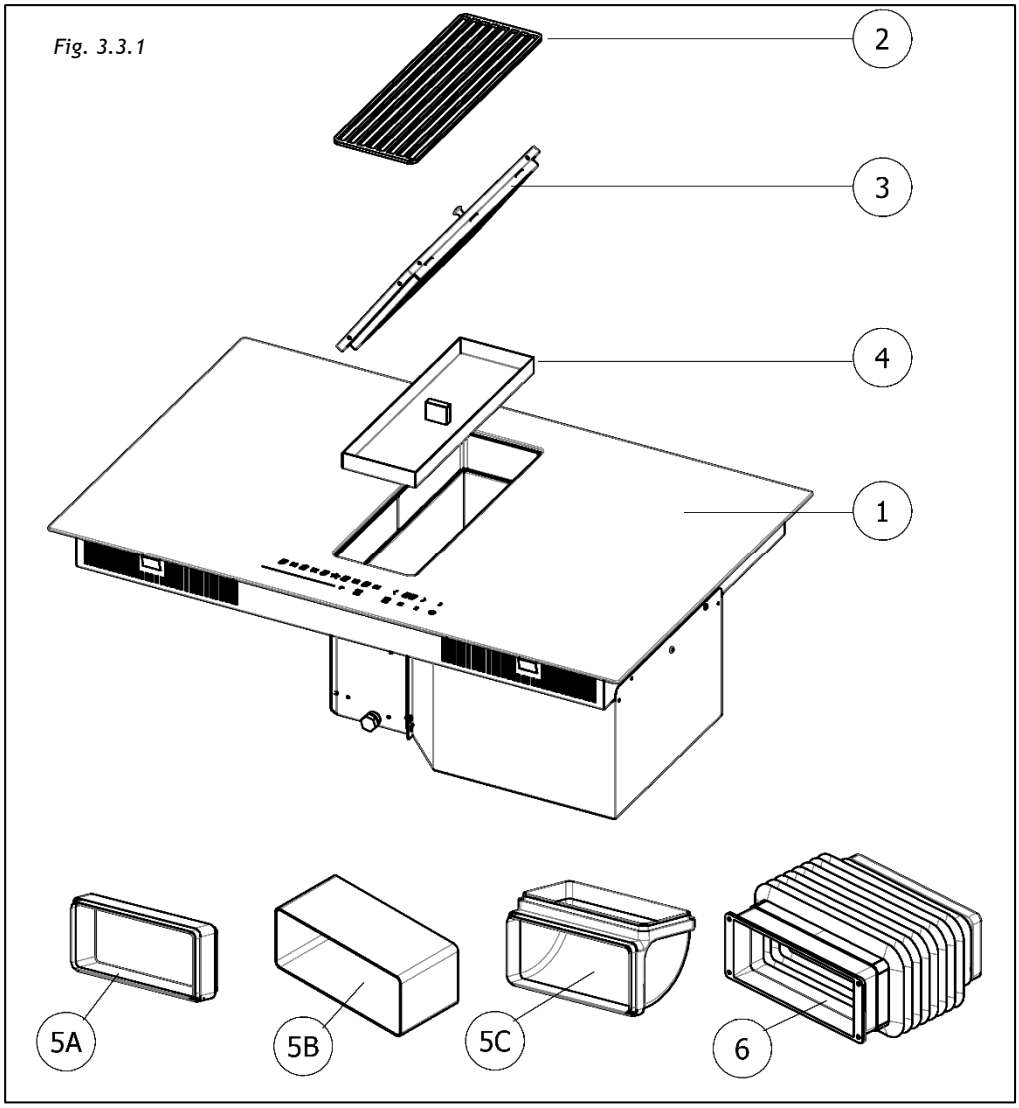

1. Hob
2. Central grille
3. Grease filter (with Long-Life odour filter, if included)
4. Condensate collection tray
5. Air outlet fittings:
   A. Fitting
   B. Duct
   C. Curve
6. Fitting kit for rear air outlet (if included)

Rear view (Fig. 3.3.2):

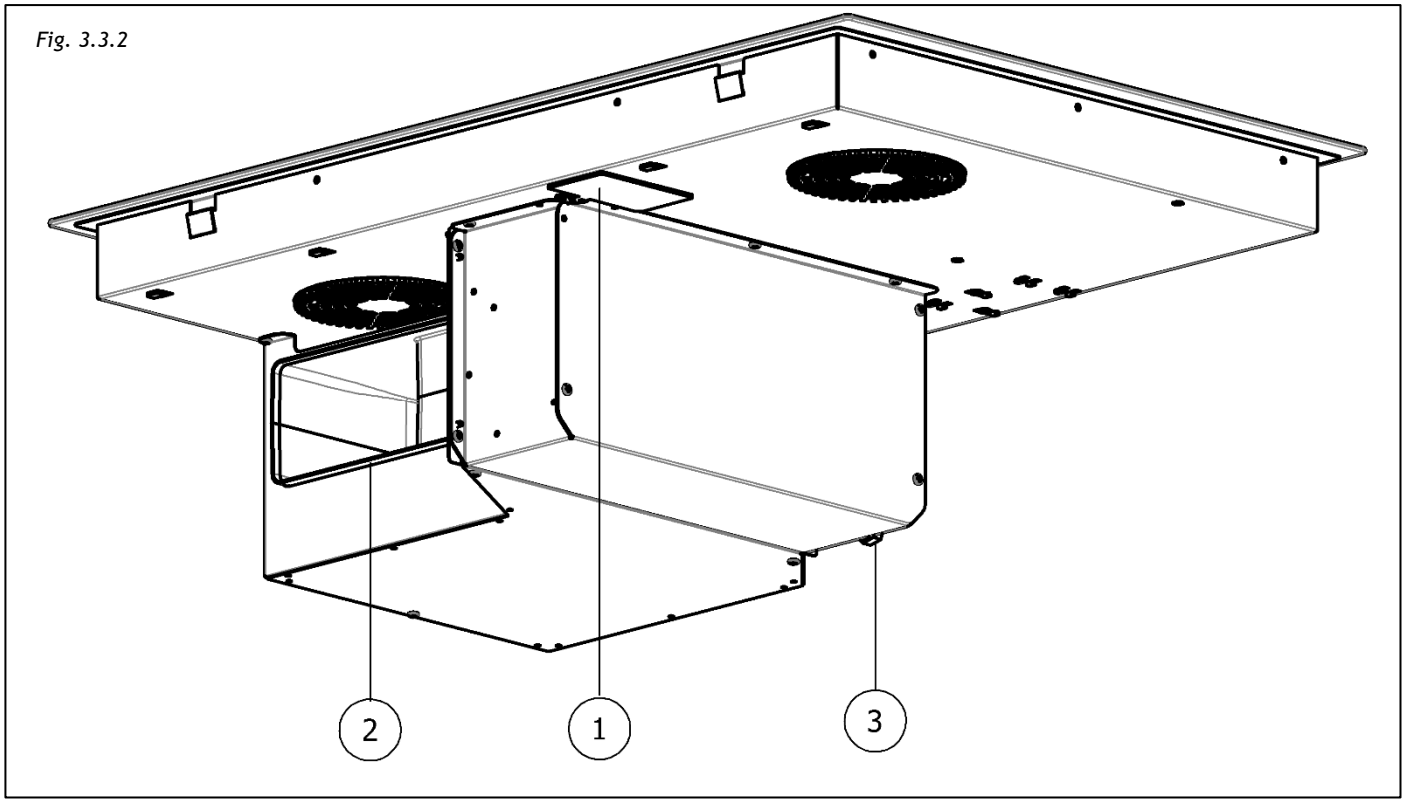

Fig. 3.3.2

1. Power box
2. Extractor outlet
3. Liquid drain plug

III.3.a INSTALLATION OF THE INDUCTION HOB

To leave the necessary space for the air pipe, it is important to install the induction hob with the centre line more than 300mm away from any wall on the rear.

The induction hob can be installed in two ways either resting on the work surface or flush with the work surface.

To perform LAY-ON INSTALLATION, drill the top as shown in Fig. 3.3.a.1

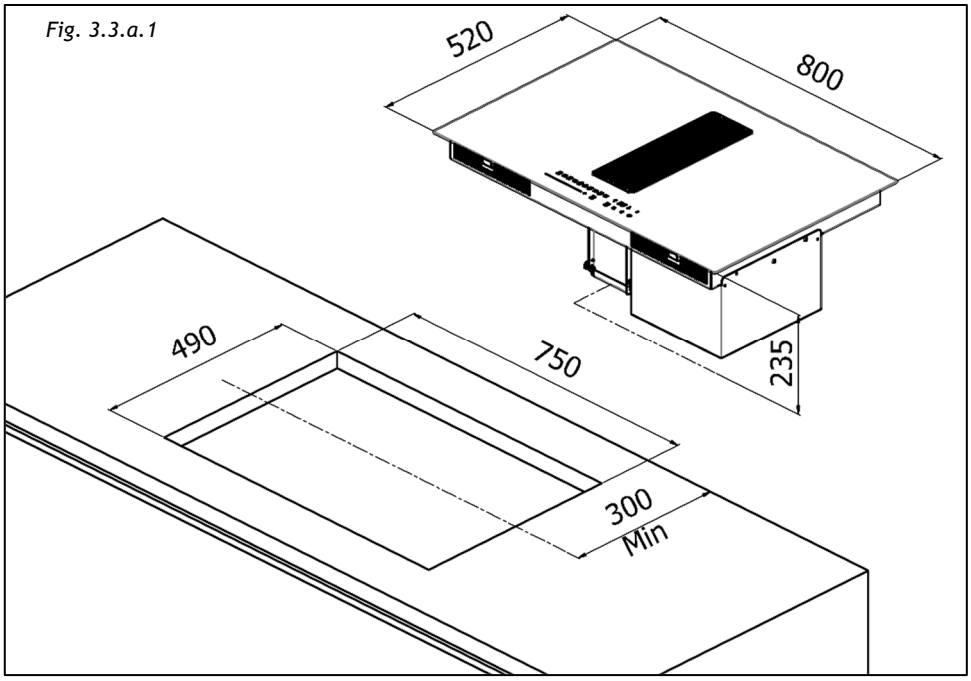

Fig. 3.3.a.1

To perform FLUSH INSTALLATION, drill and mill the work surface along the edge of the installation hole, respecting the measurements indicated in Fig. 3.3.a.2

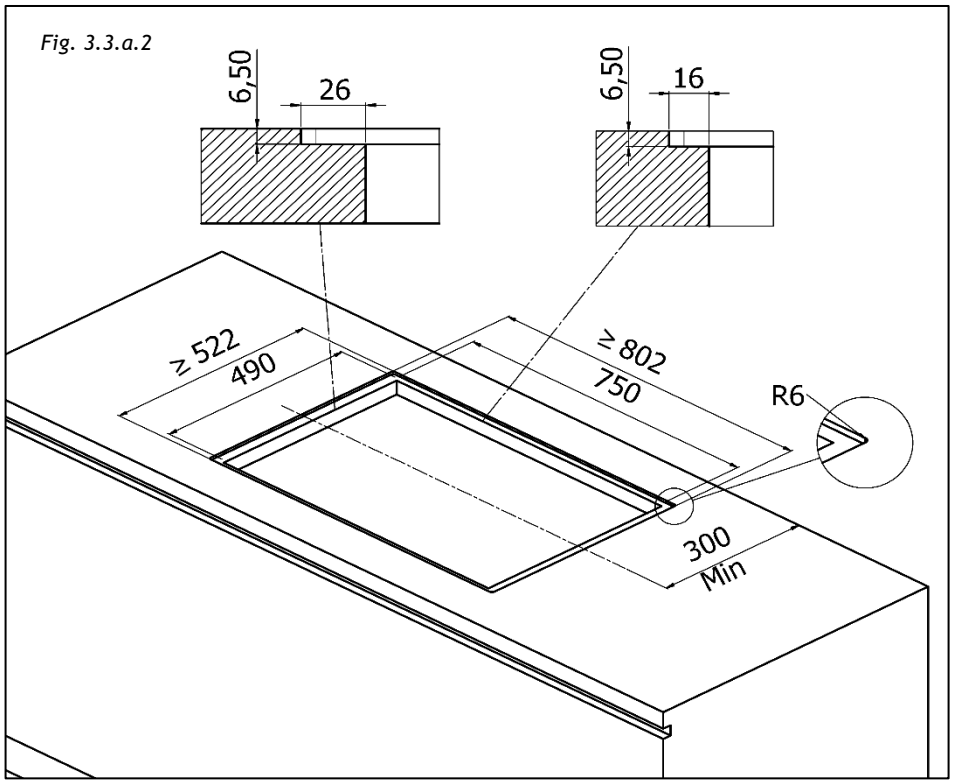

Fig. 3.3.a.2

The installation is under the sole responsibility of the specialists.

The installer is required to comply with the legislation and standards in force in their country of origin.

Materials are often used to expand work surfaces in contact with water. To protect the cut edge of the unit, apply a coat of varnish or special sealant. Particular care must be taken when applying the adhesive seal supplied with the hob to prevent leaks in the support unit. This seal ensures a proper seal when used in conjunction with smooth work surfaces.

Installing the sealing gasket:

The seal supplied with the hob prevents all liquid infiltration into the unit. Its installation must be performed carefully, respecting the following drawing.

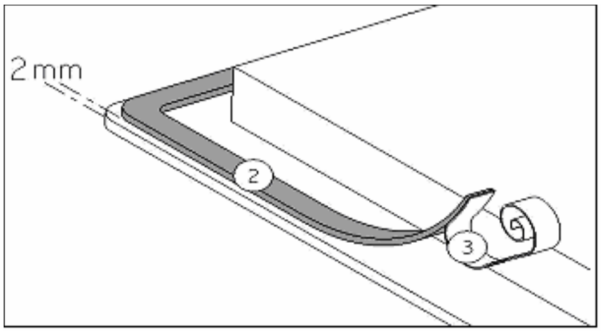

Attach the seal (2) two millimetres from the outer edge of the glass, after removing the protective sheet (3).

Assembly - installation:

· **Make sure there is a distance of 50mm between the hob and the wall or sides.**

· Ideally the hob should be installed with plenty of space on both sides. There may be a wall to the rear and tall units or a wall to one side. **On the other side, however, no unit or divider should be higher than the hob.**

· The unit or support into which the hob is to be installed, as well as the edges of the unit, the laminate coverings and the glue used to fix them, must be able to withstand temperatures of up to 100°C.

· The edge wall rods must be heat-resistant.

· The product must not be installed above cooling devices, dishwashers, stoves, non-ventilated ovens, washing machines, or dryers.

⚠ **CAUTION - Installation requirement.** Non-compliance with the specified construction requirements for the cabinet beneath the induction hob, as illustrated in Fig. 3.3.a.3, will void the product warranty. ->Ensure that the cabinet complies with the requirements shown in Fig. 3.3.a.3.

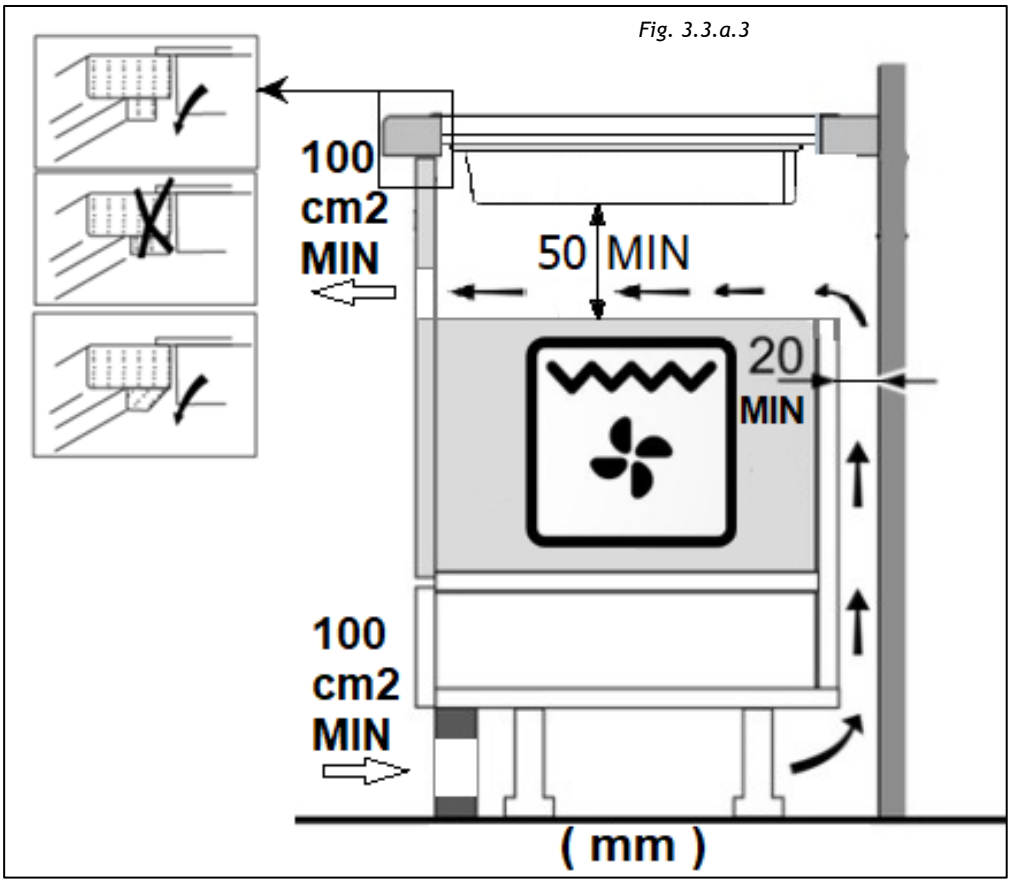

Fig. 3.3.a.3

Place the hob (Fig.3.3.a.4)

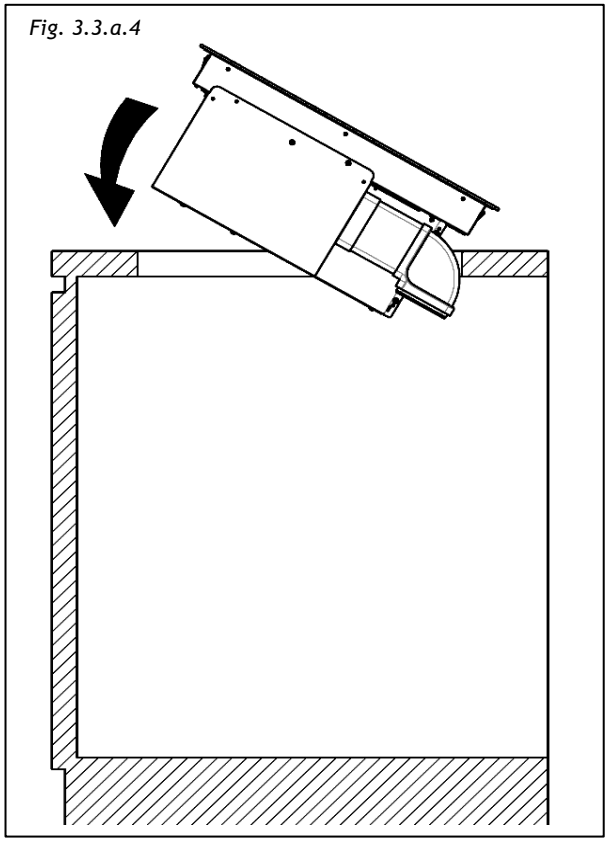
Fig. 3.3.a.4

It is necessary to ensure adequate ventilation on the front and rear of the unit, making sure that the air is able to circulate through the various air intakes as indicated below in Fig. 3.3.a.5 (3-4 fresh air intake; 1-2 hot air vents):

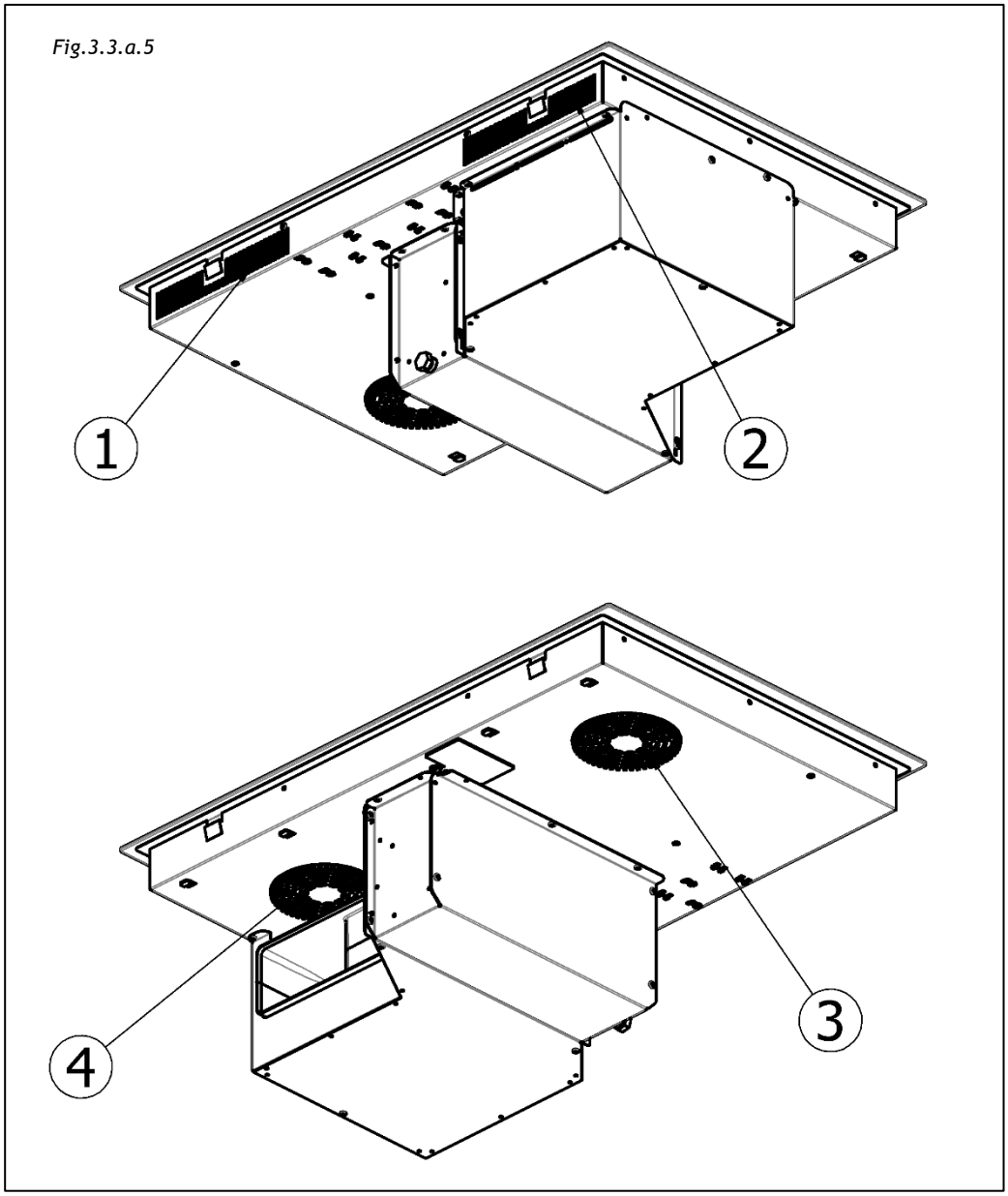

• If a drawer is under the hob, to ensure good air circulation and a good cooling system of the appliance, maintain a space of at least 30 mm between the ventilation of the lower part of the hob and what is placed inside of the drawer.

• If a drawer is positioned under the hob, avoid placing flammable items (for example: sprays) or non-heat resistant items in this drawer.

• After installation, the connection cable must not be subjected to any mechanical stress, such as due to a drawer.

III.3.b CONSTRUCTION INSTRUCTIONS - **OUTLET ON PLINTH**

To convey the air into the plinth it is necessary to create a vertical pipe parallel to the back of the unit. Appropriately sized accessories, pipes and fittings are available, please contact the manufacturer.

To ensure a correct connection between the extractor outlet (Fig. 3.3.2-2) and the duct, use the supplied use the supplied air outlet fittings (Fig. 3.3.1-5A, -5B, -5C)

To allow the vent pipe to be seated correctly, if it is provided under the plinth of the unit, the outlet should be created in the base as shown in Fig. 3.3.b.1 and the rear panel possibly removed.
The introduction of this extraction system on a unit with a depth of 600mm implies a maximum possible length for any drawers provided under the hob of approximately 450mm. If the depth of the unit is greater, the underlying drawers will also have a wider length.

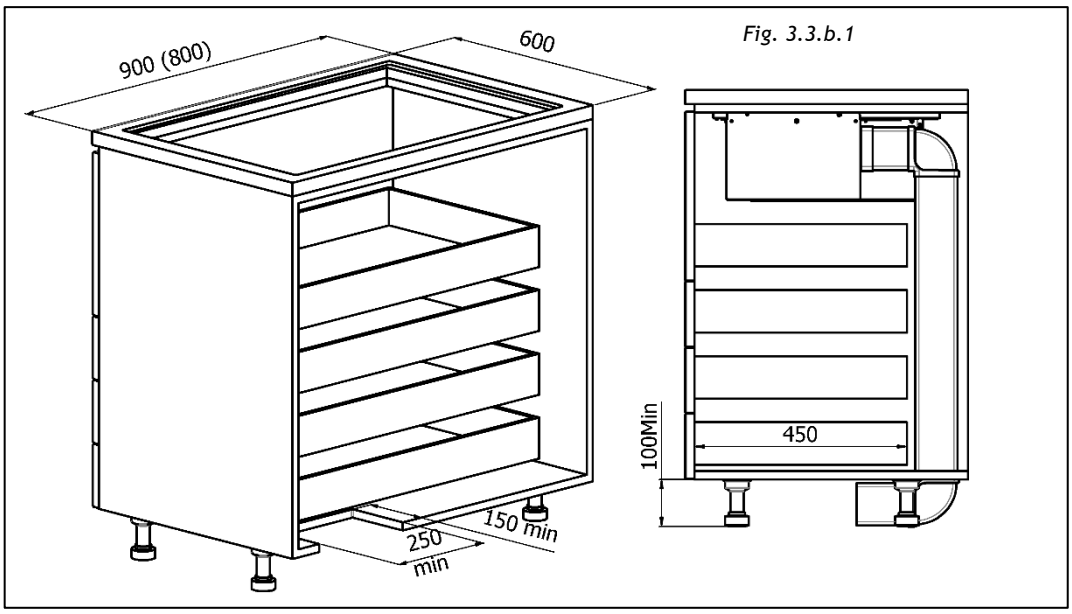

Fig. 3.3.b.1

III.3.c CONSTRUCTION INSTRUCTIONS - **REAR DISCHARGE**

To convey the air to the rear, it is necessary to create a horizontal pipe perpendicular to the back of the unit. Appropriately sized accessories, pipes and fittings are available, please contact the manufacturer.

To ensure a correct connection between the extractor outlet (Fig. 3.3.2-2) and the duct, use the supplied air outlet fittings (Fig. 3.3.1-5A, -5B, -5C).

To allow air to be vented to the rear, the outlet should not be created on the base of the unit.
The outlet should be created through the rear panel as indicated in Fig. 3.3.c.2 or the latter possibly removed.
On a unit with a depth of 600 mm, the maximum possible length for any drawers provided under the hob is approximately 550 mm. If the depth of the unit is greater the underlying drawers will also have a wider length.

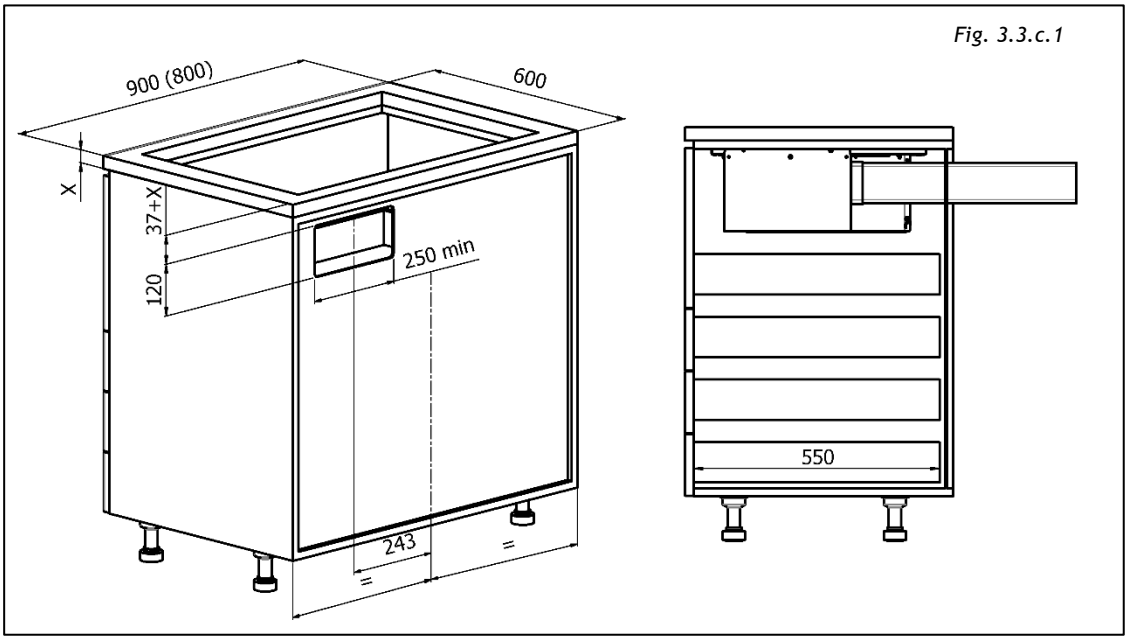

Fig. 3.3.c.1

If, on the other hand, you wish **to expel the air at the back of the cabinet**, after filtering it with the Long-Life odour filter kit (see chapter MAINTENANCE AND CLEANING), you can use the telescopic fitting **(if included)**, as described below:

Use the template provided to make the outlet on the back of the cabinet.

Measure the distance between the support surface of the top and the surface on which the template will be placed inside the cabinet, then cut out or fold this measurement onto the template.

At this point, simply draw the rectangle to be cut, taking care to align the upper right inner edge of the top cut-out with the line marked on the template (Fig. 3.3.c.2).

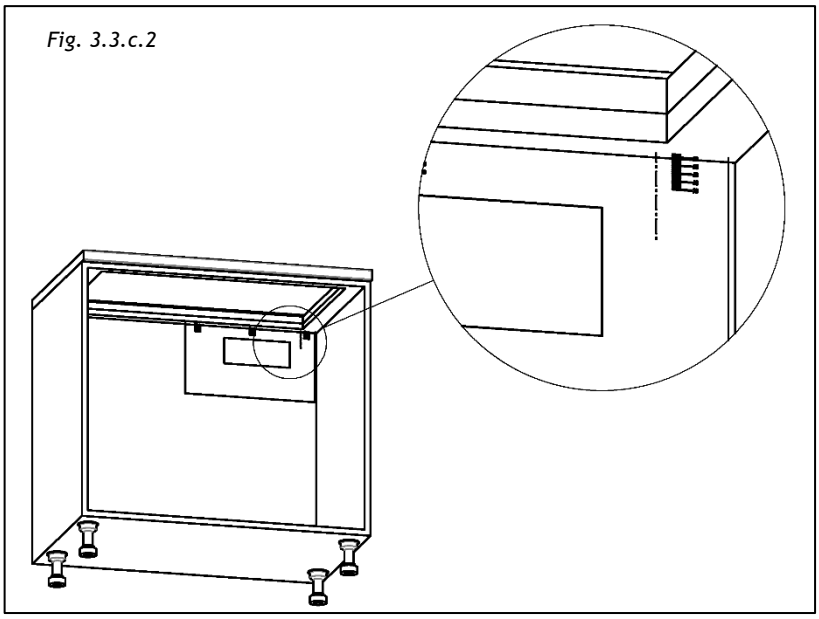

Install the rear air outlet fitting kit (Fig. 3.3.1-6), securing it to the rear panel of the cabinet using the 4 screws provided (Fig. 3.3.c.3).

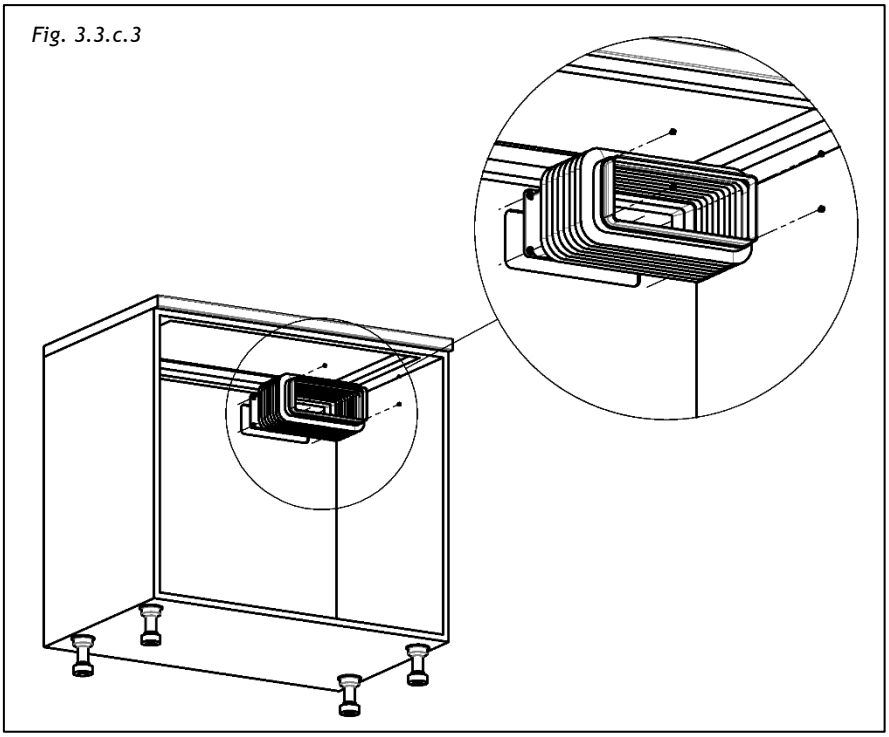

Insert the air outlet fitting (Fig. 3.3.1-5A) into the extractor outlet (Fig. 3.3.2-2) as shown in Fig. 3.3.c.4.

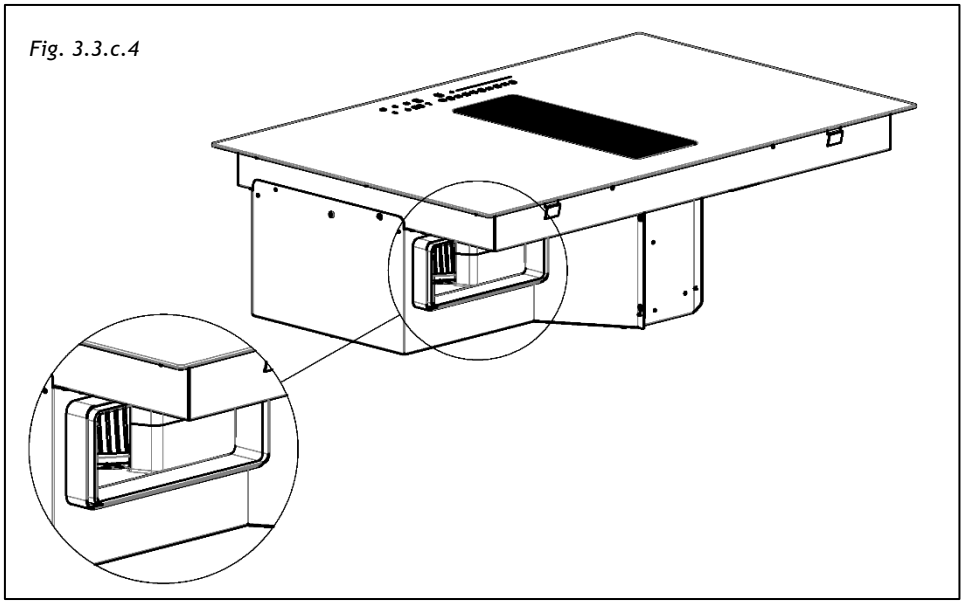

Then place the hob (Fig.3.3.c.5).

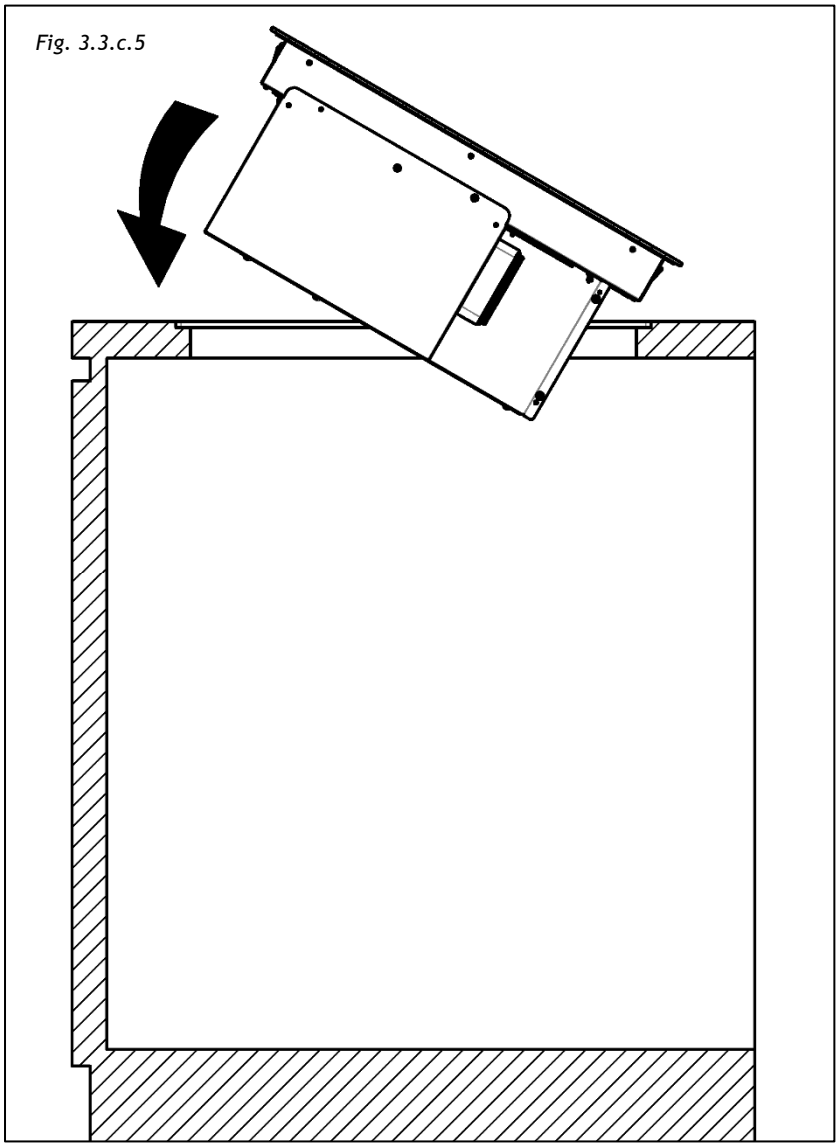

Finally connect the rear air outlet fitting kit (Fig. 3.3.1-6), previously secured to the rear panel of the cabinet, by push-fitting it onto the fitting (Fig. 3.3.1-5A) already secured to the extractor outlet, until it is correctly engaged (Fig. 3.3.c.6).

Fig. 3.3.c.6

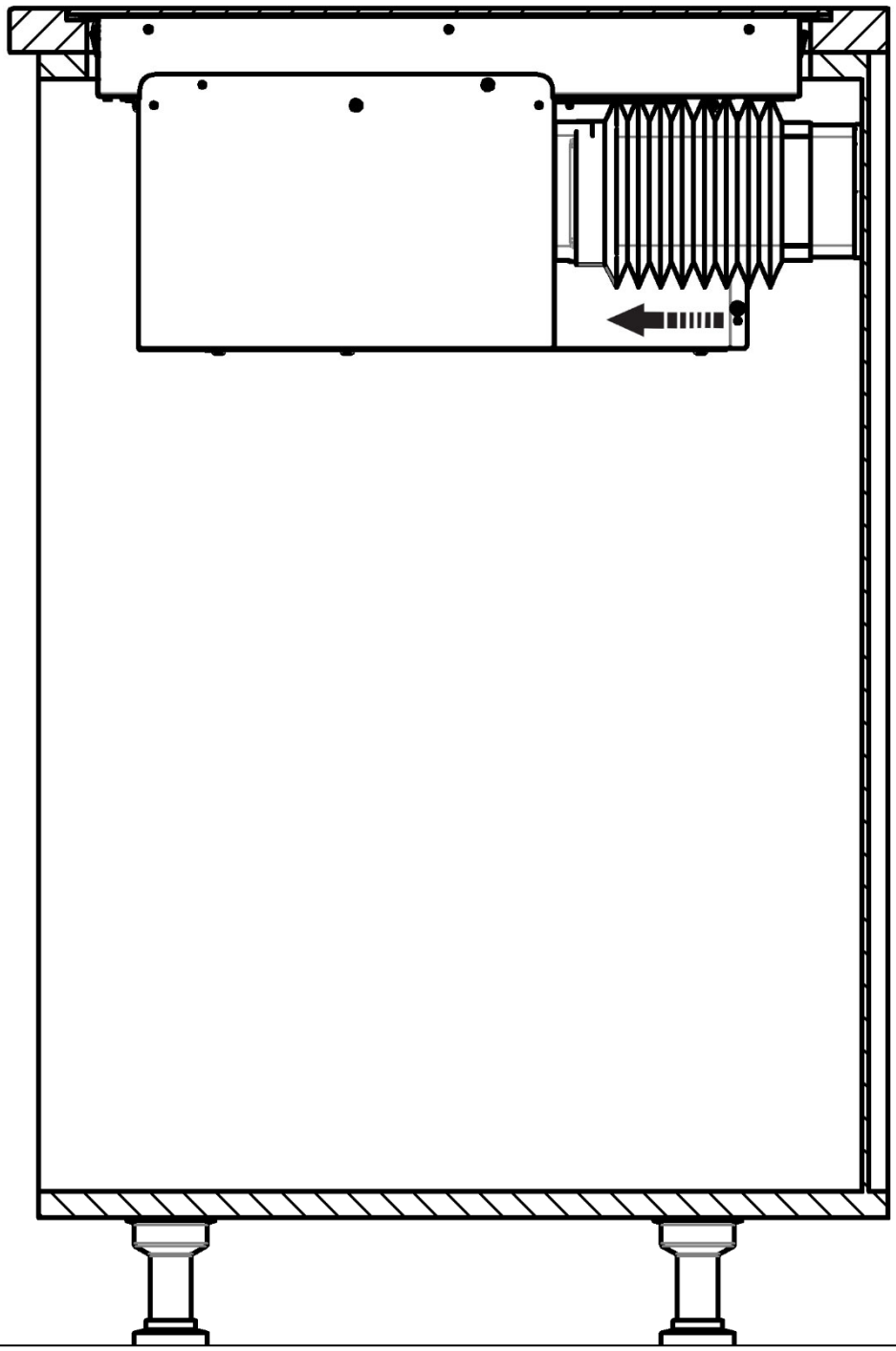

III.3.d ASSEMBLING THE AIR VENTING PIPE

To bring the air outlet to the desired position, it will be necessary to install the pipe using fittings that can be purchased separately (Fig. 3.3.d.1).

To purchase these accessories, ask the manufacturer for them.

The entire pipe must necessarily pass under the base of the unit, in the space of the plinth riser.

Our accessories also allow the installation of filtering kits.

Fig. 3.3.d.1

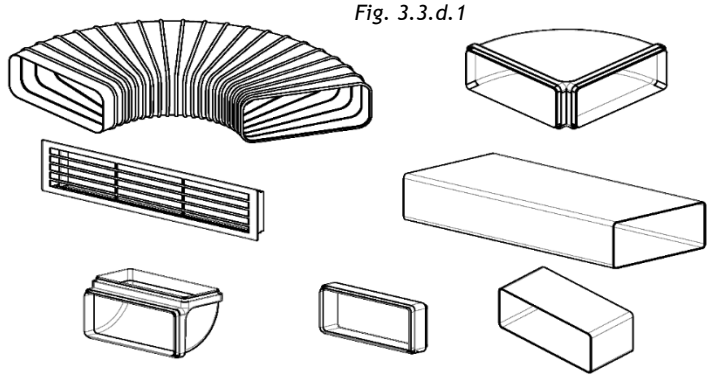

III.4 ELECTRICAL CONNECTION

The electrical connection must ONLY be performed by specialist technicians.

The electrical protection of the electrical connection upstream of the appliance must comply with the standards in force.

⚠	**WARNING - Electrical hazard.** Voltage and frequency must correspond to installation site. ->Verify that the voltage (V) and frequency (Hz) indicated on the rating plate inside the appliance correspond to those of the mains supply before connection.

Any modifications that may be necessary to the electrical system to install the appliance must only be performed by competent persons.

After installation, the insulated parts and live electrical components must be protected from possible contact.

⚠	**WARNING - Electrical hazard.** Incorrect electrical connection can damage appliance and void warranty. ->Ensure that the electrical connection is performed correctly and in compliance with applicable standards.
⚠	**DANGER - Electrical shock hazard.** Before any intervention, disconnect the appliance from the mains. ->Ensure that the appliance is completely disconnected from the power supply before carrying out any maintenance or intervention. (Fig.2.1- Fig. 2.2 SAFETY INSTRUCTIONS AND WARNINGS chapter).

These appliances must be connected to an earthed system.

The appliance must be connected to the electrical mains system, interposing an omnipolar switch which ensures disconnection from the network, with an opening distance of the contacts which allows complete disconnection under the conditions of overvoltage category III, in compliance with the installation rules (Fig.3.4.1).

Fig. 3.4.1

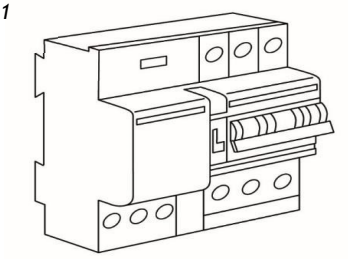

The earth connection (yellow-green cable) must never be interrupted.

The power cable must be long enough to allow connection of the appliance, built into the appliance, to the mains. If the power cable is damaged, it must be replaced in order to prevent any risk.

The manufacturer accepts no liability for damage or injury resulting from incorrect electrical connection.

Protection against live parts must be ensured after installation.

Connection to the mains must be made using an earthed plug or an omnipolar circuit breaker device with a contact opening of at least 3 mm.

The power cable must be positioned in such a way as not to touch the hot parts of the hob or anything else.

Type of connection	Included cable	Cross-section of the included cable	Alternative cable	Cross-section of the alternative cable
SINGLE-PHASE	H05V2V2-F	5x1,5	H05V2V2-F H07RN-F	3x2,5
TWO-PHASE/THREE-PHASE			H07RN-F	5x1,5

The cable temperature must never exceed the ambient temperature by more than 50°C.

The appliance is intended to be permanently connected to the electricity mains.

⚠ **WARNING - Electrical connection requirement.** Comply with the connection diagram shown in Fig. 3.4.2. ->Ensure that all electrical connections are carried out exactly as indicated in the diagram before powering the appliance.

Fig. 3.4.2

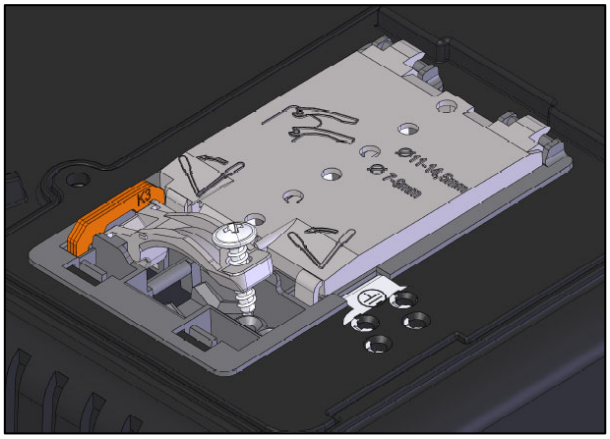

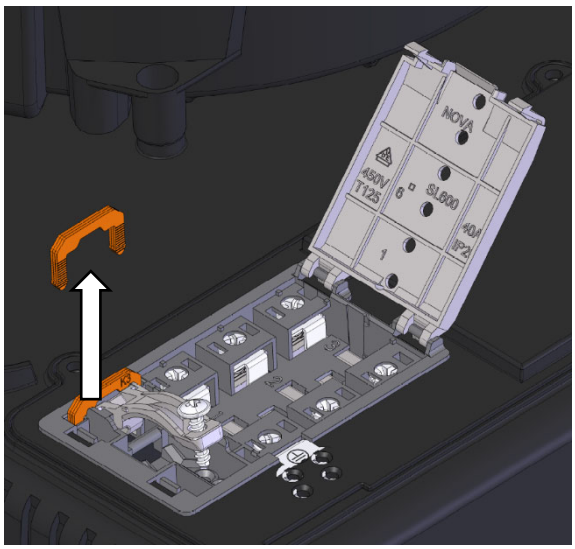

SINGLE-PHASE
1x32 circuit breaker
220-240V
1+N+GND

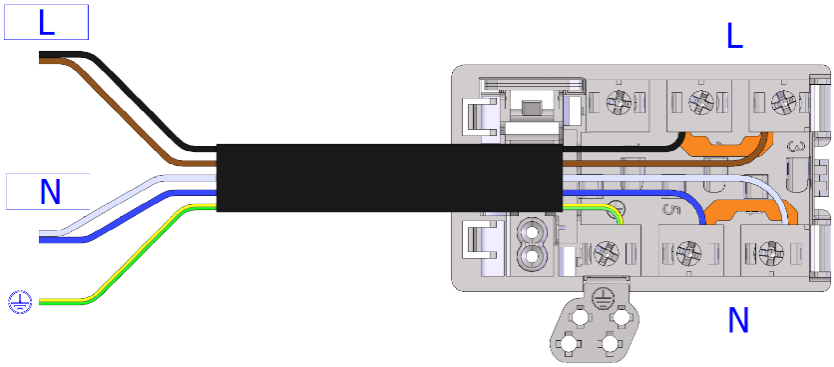

TWO-PHASE
2x16 circuit breaker
220-240V
2+N+GND

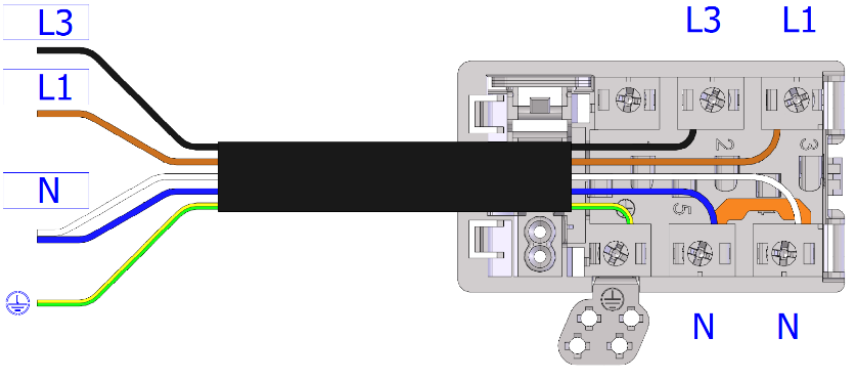

THREE-PHASE
3x16 circuit breaker
380-415V
3+N+GND

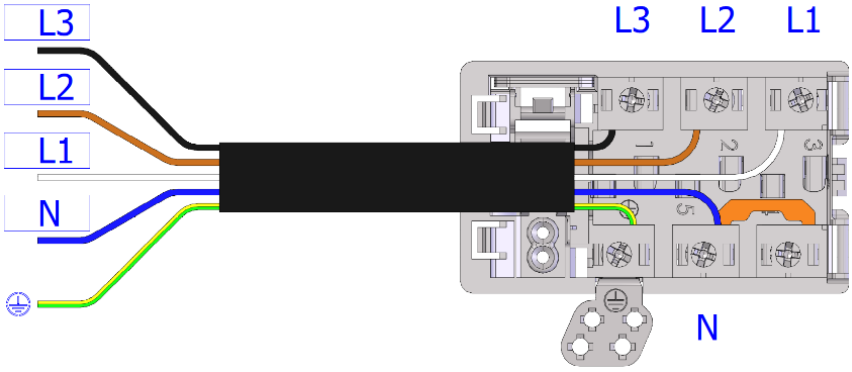

IV OPERATION

IV.1 DESCRIPTION OF THE EXTRACTING INDUCTION HOB

IV.1.a TECHNICAL CHARACTERISTICS

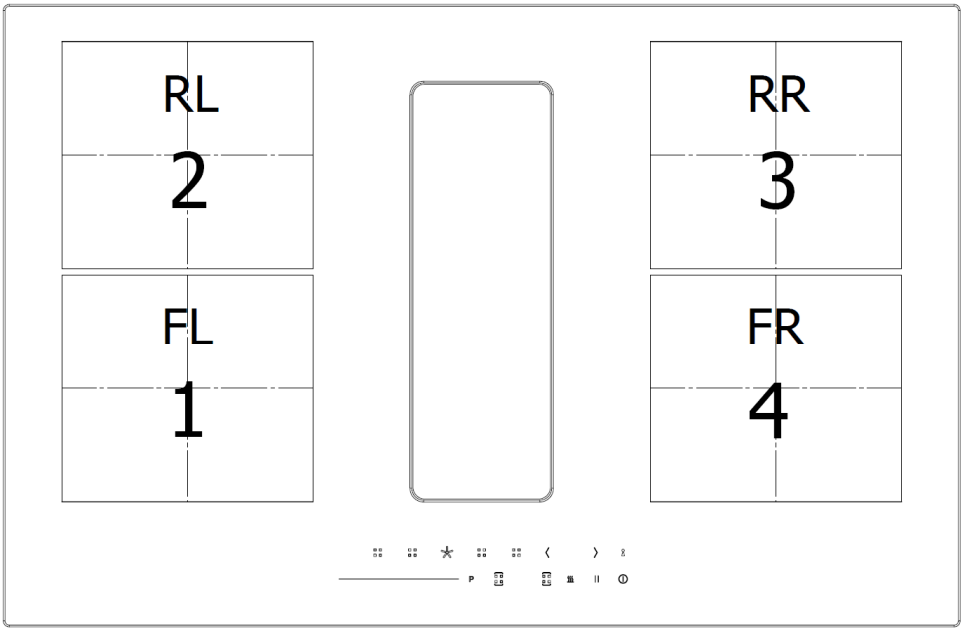

FRONT

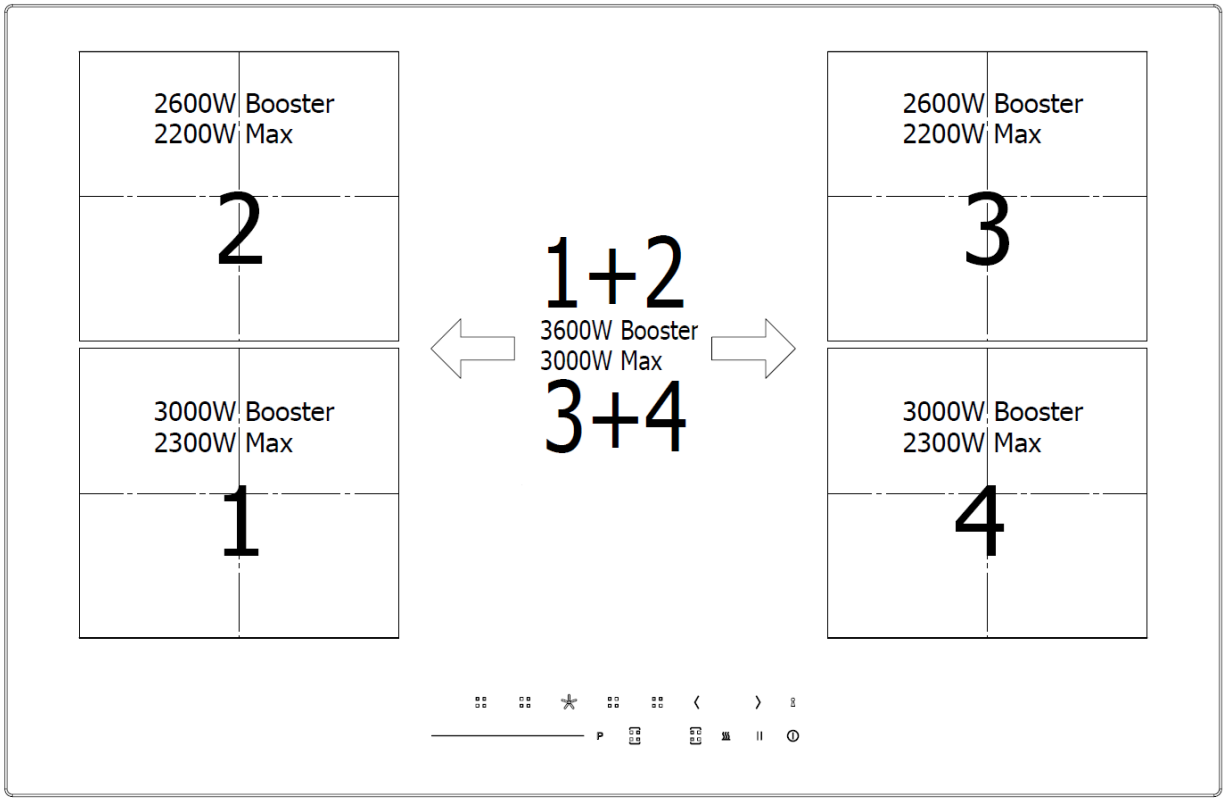

GALVAMET
THE ART OF AIR

Technical Data			
Parameters	**Value**		
Single-phase connection voltage	220 – 240V 1N		
Two-phase connection voltage	220 – 240V 2N		
Three-phase connection voltage	380 – 415V 3N		
Frequency	50Hz / 60Hz		
Max power consumed	7,4 kW Adjustable power, see on HOB CONFIGURATION; Power Adjustment.		
Fuse / single-phase mains connection	1 x 32A		
Fuse / connection to the two-phase network	2 x 16A		
Fuse / connection to the three-phase network	3 x 16A		
Dimensions (width x depth x height)	800 x 520 x 235		
Net weight (kg)	17,95		
Gross weight (kg)	23,60		
Hob:			
Surface material	Glass ceramic		
Power level	1 - 9, P		
Induction hob zone:	**Dimensions (mm)**	**Power (W)**	**Energy Consumption (Wh/kg)**
Front left cooking zone (FL)	OCTA 210x190	2300-3000	183,6
Front right cooking zone (FR)	OCTA 210x190	2300-3000	183,6
Rear left cooking zone (RL)	OCTA 210x190	2200-2600	179,5
Rear right cooking zone (RR)	OCTA 210x190	2200-2600	179,5
Bridge cooking zone: Left (FL+RL) / Right (FR+RR)	BRIDGE 210x380	3000-3600	181,6
Extraction system:			
Power level	1 - 9, P		
Power (W)	180		

GALVAMET
THE ART OF AIR

IV.1.b MAIN CONTROL CHARACTERISTICS OF THE EXTRACTOR HOB

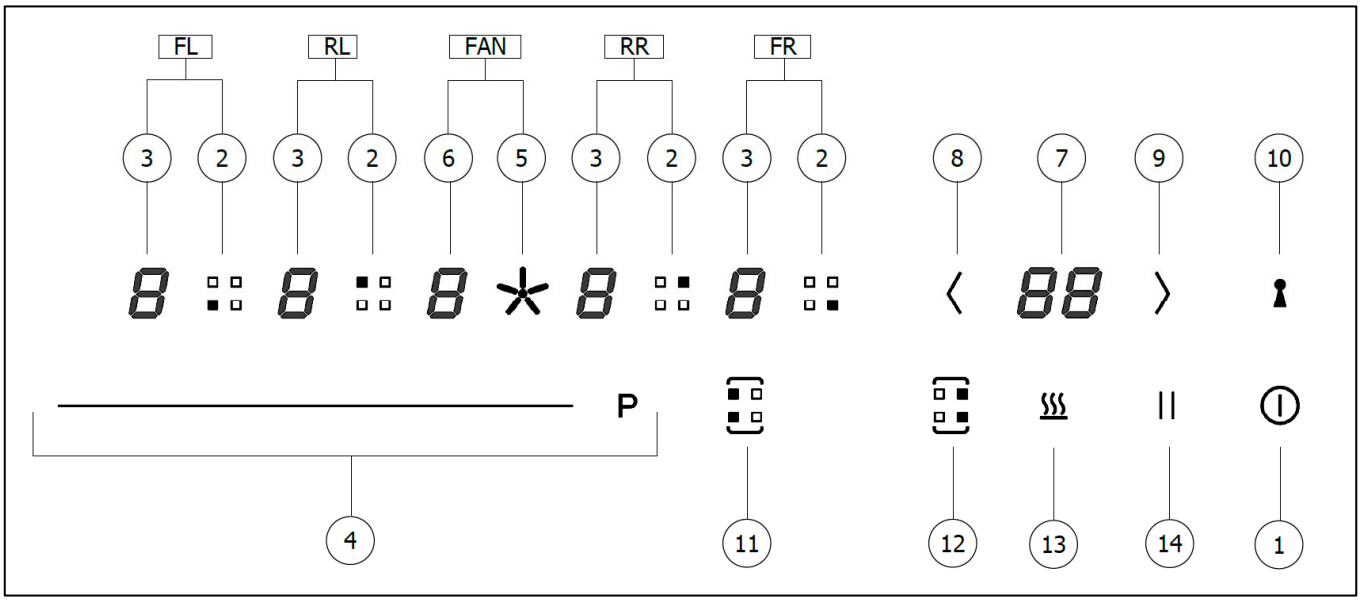

CONTROL PANEL (TOUCH CONTROL "TC")

Touch keys (Touch) / Display

1. ON/OFF of the hob/extractor system
2. Cooking zone selection:
   2FL → Front Left
   2FR → Front Right
   2RL → Rear Left
   2RR → Rear Right
3. Cooking zone display:
   3FL → Front Left
   3FR → Front Right
   4RL → Rear Left
   5RR → Rear Right
4. Selection Bar:
   Increase/Decrease cooking power level and extraction speed (power): 1-9, P (Booster)
5. Selection/activation of extractor
6. Extractor display
7. Digital Timer display
8. Decrease Timer time
9. Increase Timer time
10. "Child Lock" function activation
11. Activation of left-side "Bridge" function (2FL+2RL)
12. Activation of right-side "Bridge" function (2FR+2RR)
13. "Warming" function activation
14. "Pause" function activation

IV.2 CONTAINERS FOR COOKING

IV.2.a QUALITY OF THE PANS

⚠ **CAUTION - Cooking requirement**. Use of incompatible cookware may impair the correct operation of the hob and prevent the cookware from heating. ->Ensure that all pans used are induction-compatible and bear the appropriate induction symbol before use on the hob.

Suitable materials: steel, enamelled steel, cast iron, ferromagnetic stainless steel, aluminium with a ferromagnetic base.

Unsuitable materials: aluminium and stainless steel without ferromagnetic base, copper, brass, glass, ceramic, porcelain.

Manufacturers specify whether their products are induction compatible.

To check if the pans are compatible:

· Place a small amount of water in the pan placed on an induction cooking zone set to the minimum level. This water must heat up in seconds.

· A magnet sticks to the bottom of the pot.

Some cookware may produce noise when placed on an induction cooking zone. This noise does not mean that there is a fault with the appliance and it will not affect the cooking operation.

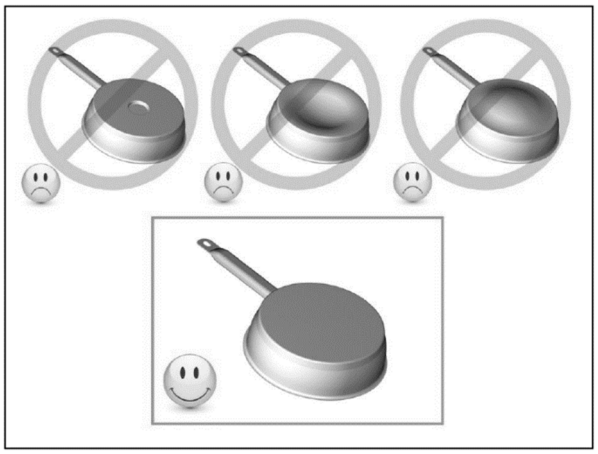

IV.2.b DIMENSIONS OF PANS

The minimum recommended diameter of the pans to be used is:

Function active	Minimum pot diameter
Single cooking area	Ø 160 mm
“Bridge” cooking zone	Ø 210 mm

The bottom of the pot must never extend over the central grille.

To obtain the best efficiency of the hob, position the suitable pot well centred in relation to the cooking zone marked on the glass ceramic surface.

IV.3 INDUCTION HOB

All functions of this hob are designed to comply with the most stringent safety regulations.
For this reason:

• Some functions are not activated, or are deactivated automatically, if there are no cookware on the cooking zones or when they are incorrectly positioned.

• In other cases, the activated functions will be automatically deactivated after a few seconds, if the specific function requires a further setting that has not been selected (e.g.: “Turn the hob on” without “Selecting the cooking zone” and the “Operating temperature”).

• In the case (for example) of prolonged use, the cooking zone may not immediately shut down because it is in the cooling phase; the “H” symbol will appear on the cooking zone display, to indicate the execution of this phase.

Wait for the display to switch off before approaching the cooking zone.

IV.3.a COOKING ZONE DISPLAY

The following is shown on the cooking zone displays:

Cooking zone on	0
Power level	1 9 P (P=Power Booster)
Residual heat display	H
Pot Detection	U
Bridge function active	n
Warming function active	
Pause function	II

IV.3.b HOB CHARACTERISTICS

- **Permanent Pot Detection:**

The hob is only activated in the presence of pots on the cooking zones.

If a suitable pot is not placed on the activated cooking zone, the power supply to that zone is interrupted and the corresponding zone display flashes showing U.

If no suitable pot is detected within 30 seconds, the heating zone switches off automatically and the symbol ⬅ appears on all cooking zone and extraction system displays.

If the pot is removed, the symbol U appears immediately.

- **Safety Shutdown:**

For safety reasons, each cooking zone has a maximum operating time which depends on the power level set (default timer).

- **Residual Heat Indicator:**

⚠ **CAUTION - Burn Hazard.** The residual heat indicator “H” shows that the cooking zone is still hot. ->Do not touch the cooking zone while the “H” symbol is displayed.

When one or more cooking zones shut down, the presence of residual heat is indicated by a visual signal on the corresponding zone display, by way of the H symbol. During this indication period, the electronic cooling system remains in operation.

- **Acoustic feedback (Beep)**

Function activation acoustic signal

IV.3.c HOB CONFIGURATION

The maximum total power of the induction hob is 7400 W.

The power can be adjusted to suit your requirements.

➢ **Power Regulation**

Press and hold the button ⏻ until the symbol ▬ appears on the cooking zone displays and on the extraction display. Within 60 seconds, follow the instructions below to set the desired power level:

Press and hold simultaneously for more than 2 seconds the buttons shown in the figure below:

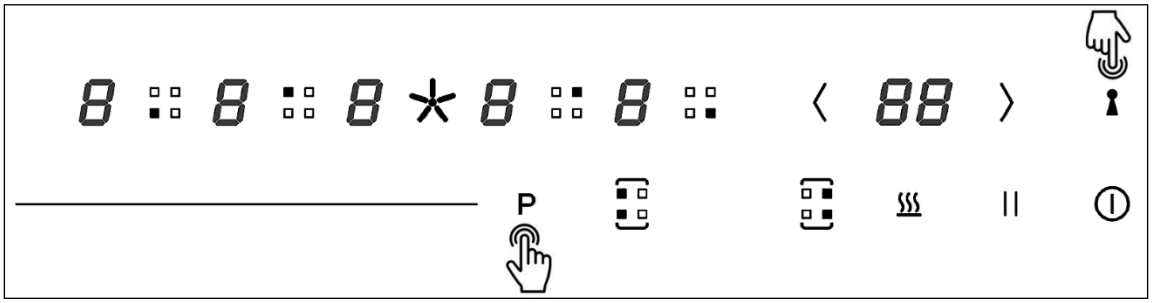

At this point, the digital display of cooking zone 3FL alternately shows “P” and “5”.

Press the button 〈 to alternately display “P” and “5” on the digital display of cooking zone 3FL , while the timer display (7) shows a steady “E” .

Press the button 〉 to alternately display “P” and “5” on the digital display of cooking zone 3FL , while the timer display (7) shows a steady “EF” .

Press both buttons 〈 + 〉 simultaneously; the digital display will show the currently set maximum power value “XX” (for example, “74”).

Press the button 〉 repeatedly to change and set different total power levels:

15 (1.5 kW) / 28 (2.8 kW) / 33 (3.3 kW) / 45 (4.5 kW) / 57 (5.7 kW) / 74 (7.4 kW)

Press the 〈 + 〉 buttons again to save the selected total power limit. The appliance will automatically exit setup mode and return to displaying the symbol ▬ on the cooking zone displays and the extraction display.

Notes:

- During the power adjustment procedure, if the configured value and the exit/shutdown mode are not saved, the settings will not be retained when exiting the menu.
- If the power value has been saved, it will remain unchanged even after the appliance has been switched off or after a power interruption.

The cooking zones on each side (left and right) share a combined maximum power level of 8 + 8. The hob automatically manages power distribution between the active zones, adjusting the operating levels according to the selected settings.

IV.3.d HOB OPERATION

Before selecting any function, it is necessary to activate the desired zone.

➢ **Switch-on/off**

The extractor hob is turned on by touching the ON/OFF key (1) ⏻ for a few seconds; a short acoustic signal (buzzer) is emitted.

The symbol ▬ is displayed on all cooking zone and extraction digital displays.

If no operation is performed, the induction hob switches off automatically after 30 seconds.

To switch off, touch the ON/OFF key (1) ⏻

All cooking zones will stop supplying power and, if active, the extraction system will continue operating at minimum speed for 5 minutes before stopping. Instructions relating to the extraction module are provided in the dedicated section.

➢ **Selection of cooking zones**

Touch the selection key (2) corresponding to the desired cooking zone.

➢ **Power level: increase/decrease**

The hob is equipped with 9 power levels.

Touch and slide your fingers along the Selection Bar (4) to increase or decrease:

→ to the right to increase the power level;

← to the left to decrease the power level.

Adjustment can be made by sliding along the Selection Bar (4) while maintaining contact, or by directly selecting a fixed power level.

The selected power level will flash on the cooking zone display (3) for approximately 5 seconds, after which the system automatically exits the setting mode.

Note: It is only possible to adjust the power within this 5-second interval.

Setting a cooking zone to level 0 immediately cuts off the power to that zone. If all cooking zones are set to “0”, the induction hob switches off automatically after 30 seconds of inactivity.

➢ "P" Booster Function

The hob is equipped with an additional power level (Booster, above level 9), which remains active for 5 minutes and then the power automatically returns to level 9.

This function is useful for heating or boiling a large quantity of water.

To activate the Booster function, first select the desired cooking zone, then press the “P” key P .

The zone enters BOOST mode and the “P” symbol flashes on the corresponding cooking zone display (3). After approximately 5 seconds, the setting is confirmed and the flashing stops.

On the same side, priority is determined by the last cooking zone on which an adjustment was made. The system automatically distributes power levels within the limits of the maximum available power.

⚠ **WARNING - Burn hazard.** Booster function must only be used for water heating because oils or fats may ignite. ->Do not use the Booster function for cooking with oil or fat, as they may overheat and ignite.

➢ Child Lock function

The Child Lock is a feature to protect the hob from undesirable operations, for example by children.

Activation:

While the hob is operating, or while all digital displays of the cooking zones and the extraction system show the symbol , or when the induction hob is switched off; press and hold the Child Lock button (10) for 3 seconds to activate the control lock. A short acoustic signal (buzzer) is emitted and the timer display (7) 88 shows “Lo”. The indication remains visible for approximately 5 seconds and then disappears. If any key is pressed, the timer display (7) 88 shows “Lo” again for 5 seconds.

Deactivation:

If the Child Lock button (10) is pressed and held for 3 seconds while the appliance is locked, the hob is unlocked and a long acoustic signal is emitted.

After activating the Childproof lock, only the ON/OFF key and the Child Lock key (10) remain active. In this condition, the lock remains active until it is manually deactivated.

➢ Warming function

This function keeps cooked food warm at a constant temperature.

Activation:

Switch on the hob using the ⏻ ON/OFF key (1), select the desired cooking zone and press the Keep Warm key .

Each cooking zone supports the keep warm function with three selectable temperature levels via the dedicated key. The selected level is shown on the cooking zone display.

Level 1: melting or defrosting function (40 ±10 °C)

Level 2: keep warm function (70 ±10 °C)

Level 3: slow cooking function (90 ±10 °C)

Note: even in keep warm mode, the timer and other appliance functions remain active.

Deactivation:

When the cooking zone is in keep warm mode, select the relevant zone and press the key repeatedly until “0” is shown on the corresponding display.

➢ Pause function

The Pause function suspends any active function on the hob, bringing the cooking power to 0.

During normal operation of the product, press the Pause button || (14) to simultaneously interrupt the heating of all cooking zones. All displays will show the symbol .

Press the Pause button || (14) again and all displays will flash. Then press any button, except the Pause button and the ON/OFF button ⏻, to restore the previously active cooking settings.

If the Pause mode is not deactivated within 10 minutes, the hob will switch off automatically.

Note:

1. When the Pause function is active, all timer functions and power delivery are suspended (including the 5-minute timer of the Booster function in P mode, the manual timer, the automatic timer and acoustic signals).
2. When the hob is switched on but no cooking zone is active, the Pause function cannot be activated.
3. The Pause Function does not suspend extraction.

➢ **Autonomous Timer Function**

The Autonomous Timer function is a countdown timer.

To activate it, switch on the hob, activate a cooking zone and wait until the flashing of the cooking zone stops.

Press the timer button 〈 or 〉timer touch control on the digital timer display. When the set time expires, an acoustic signal will sound for 30 seconds, without switching off the cooking zone.

This function cannot be set if the cooking zone is not in operation.

➢ **Cooking Zone Switch-Off Timer**

✓ **Single cooking zone**

To set the function, select and activate the relevant cooking zone, press the timer key 〈 or the timer key 〉 on the digital timer display within 5 seconds (while the digital display is flashing).

The decimal point in the lower right corner of the cooking zone digital display will blink, confirming the association of the timer with the selected cooking zone.

When the set time expires, the corresponding cooking zone switches off and an acoustic signal will sound for 30 seconds. The timer digital display will flash showing “0”; pressing any key will stop the alarm.

✓ **Multiple cooking zones**

During operation of the appliance it is possible to set a cooking time simultaneously for each cooking zone. When the set time is reached, the corresponding cooking zone automatically stops power delivery and an acoustic signal (buzzer) will sound for 30 seconds. Pressing any key on the appliance during these 30 seconds stops the acoustic signal.

To set the function, select and activate the relevant cooking zone, press the timer key 〈 or the timer key 〈 on the digital timer display within 5 seconds (while the digital display is flashing).

The decimal point in the lower right corner of the cooking zone digital display will blink, confirming the association of the timer with the selected cooking zone.

The default timer value in manual mode is 00 minutes. At the end of the setting, the decimal point in the lower right corner of the timer display remains on to indicate that the timer is active and programmed.

Notes:

1. When multiple timers are set simultaneously, the timer closest to expiry has display priority. To view other timers, select the cooking zone and the remaining time will appear on the display.
2. If the cooking zone is not in operation, timer functions cannot be set.
3. The extraction can also be programmed with a timer function, following the same operating procedures as the induction hob.

➢ **Default Timer:**

If no specific duration is set for a cooking zone, the default timing function is automatically activated for all zones. The duration of the default timer is determined according to the set power level and the corresponding cooking zone will switch off automatically when the preset time is reached.

Below are the default automatic switch-off timers and manual timer for each power level:

Power Level	1	2	3	4	5	6	7	8	9
Default timer (minutes)	360	360	360	180	180	180	120	120	120
Manual timer (minutes)	1-99								

➢ **Bridge Function**

This function allows both cooking zones to work at the same time forming a single cooking zone with the same power level.

This function allows homogeneous cooking with large pots.

The function is provided on all cooking zones:

2FL + 2RL

2FR + 2RR

Activation:

To activate the Bridge Function of the left side, press and hold the key for 3 seconds.

The front left cooking zone display (3FL) shows the symbol n , while the rear left cooking zone display (3RL) shows “0” and it is possible to adjust the power level via the rear left slider (3RL).

To activate the Bridge Function of the right side, press and hold the key for 3 seconds.

The front right cooking zone display (3FR) shows the symbol n , while the rear right cooking zone display (3RR) shows “0” and it is possible to adjust the power level via the rear right slider (3RR).

Note: In “Bridge zone” mode it is also possible to use the “Warming Function” at 3 temperature levels (see chapter dedicated to this function).

Deactivation:

When level “0” is set, the mode is not automatically deactivated; to exit the function it is necessary to keep the Bridge Zone key (left or right), or pressed for 3 seconds.

Note:

During the Bridge Function, the cooking zones are considered a single cooking area and therefore, if the Cooking Zone Timer is active, when it expires it will cause both cooking zones to switch off automatically.

➢ Power table

The following cooking settings are for guidance only.

The actual settings depend on several factors: firstly, on the cookware used; secondly, on the quantity of food to be prepared.

It is recommended to determine the most suitable settings based on actual cooking performance.

Power Level		Cooking type	Recommended use
Maximum	**Booster**	Quick heating	Ideal to quickly raise the temperature of food up to rapid boiling in the case of water or to quickly heat cooking liquids
	8-9	Frying, boiling	Ideal for browning, starting cooking, frying frozen products, boiling quickly
High	**7-8**	Browning, frying, boiling, grilling	Ideal for frying, maintaining a lively boil, cooking and grilling (for a short time, 5-10 minutes)
	6-7	Browning, cooking, stewing, frying, grilling	Ideal for frying, maintaining a light boil, cooking and grilling (for medium duration, 10-20 minutes), preheating accessories
Medium	**4-5**	Cooking, stewing, frying, grilling	Ideal for stewing, maintaining a delicate boil, cooking (for a long time). Finishing pasta dishes
	3-4	Cooking, simmering, thickening, stirring	Ideal for prolonged cooking (rice, sauces, roasts, fish) in the presence of accompanying liquids (e.g. water, wine, broth, milk), stirring
	2-3	Cooking, simmering, thickening, stirring	Ideal for prolonged cooking (volumes less than a litre: rice, sauces, roasts, fish) in the presence of accompanying liquids (e.g. water, wine, broth, milk)
Low	**1-2**	Melting, defrosting, keeping warm, stirring	Ideal for softening butter, gently melting chocolate, defrosting small products
	1	Melting, defrosting, keeping warm, stirring	Ideal for keeping small portions of freshly cooked food warm or keeping serving dishes warm and stirring risottos
Off	**0**	None, hob switched off	Hob in stand-by or off position (possible presence of residual heat from the end of cooking, indicated with H)

Cooking tips:

1. Reduce the power level when the food reaches boiling point.
2. Using a lid reduces cooking time and energy consumption.
3. Start heating at a high power level; when the ingredients are well heated, reduce the power level and continue cooking.

IV.4 EXTRACTION

IV.4.a PRELIMINARY INDICATIONS

For optimum extraction performance, position cookware so that cooking vapours are directed towards the extraction inlet. (Fig. 4.4.a.1).

Fig. 4.4.a.1

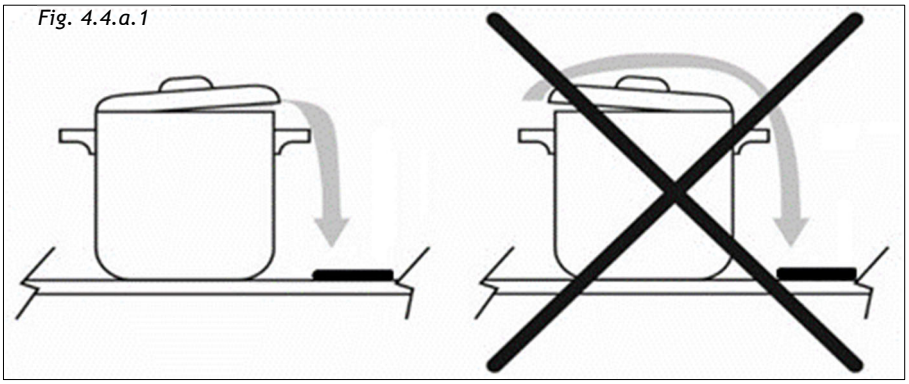

Do not place any objects on the central grille or on the control panel (Touch Control "TC") (Fig.4.4.a.2).

Fig. 4.4.a.2

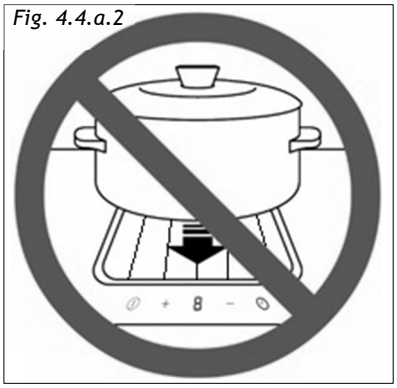

IV.4.b EXTRACTION OPERATION

➢ **<u>Turning on the extraction system:</u>**

Switch on the hob by touching the ON/OFF key ⏻ (1) for a few seconds, then press the selection key ✳ (5FAN).

The extraction digital display (6FAN) will flash showing "0".

➢ **<u>Extraction speed (power):</u>**

The extractor is equipped with 9 levels of extraction speed (power).

Touch and slide your fingers along the Selection Bar (4) to increase or decrease:

→ to the right to increase the power level;

← to the left to decrease the power level.

The power level set will be displayed in the Extraction Display area (6FAN)

After selecting the speed, the extraction display (6FAN) will flash for 5 seconds and the setting will be automatically confirmed; alternatively, it is possible to confirm immediately by pressing the selection key again (5FAN) ✳ .

- **Booster function "P"**

The extractor is equipped with an additional power level (Booster, in addition to level 9).

The extractor will go to the supplementary speed (Booster) for 5 minutes and then it will automatically switch to level 9.

To activate the Booster function, scroll with your fingers along the Selection Bar (4) beyond level 9 up to "P".

Booster level is indicated on the Extraction Display (6FAN) with symbol P

- **Switching off the extraction system:**

When the extractor is operating, set it to level 0 to switch it off; alternatively, press the ON/OFF key twice to switch it off immediately.

- **Automatic Operation**

By activating this function, the appliance will switch on at the most suitable speed, adapting the extraction capacity to the maximum cooking level used in the cooking zones.

When the cooking zones are switched off, the appliance adapts its extraction speed, progressively decreasing it, removing odours and residual vapours.

In automatic mode, it is sufficient to switch on a cooking zone and the hood will automatically adjust the extraction speed. Upon first switch-on, the hood is set to manual mode by default; on subsequent switch-ons, the last operating mode set will be maintained.

Activation:

During operation of the appliance, press and hold the extraction selection key (5FAN) for 3 seconds. After this time, the extraction digital display (6FAN) will show the letter A, which will flash for 5 seconds. At the end of the flashing period, automatic mode will be activated.

The extraction speed will be automatically adjusted according to the heating level of the induction hob. In automatic mode, only the letter A is displayed on the extraction display (6FAN); the other speed levels are not shown.

When the extractor is in automatic mode, pressing the ON/OFF key causes the flashing letter A to appear on the display, indicating that automatic mode remains active.

Pressing the ON/OFF key again switches the system off completely.

Deactivation:

When the extraction system is in automatic mode, press and hold the key (5FAN) for 3 seconds. The digital display will then show the current operating mode, indicating that automatic mode has been successfully deactivated.

Correspondence of extraction levels in automatic mode:

Maximum cooking zone level	Extraction level
1	2
2	2
3	5
4	5
5	5
6	8
7	8
8	9
9	9
P	P
Level 1 – Warming Function (equivalent to power level 1)	2
Level 2 – Warming Function (equivalent to power level 8)	9
Level 31 – Warming Function (equivalent to power level 8)	9

➢ **Adjustable and Delayed self-switching Off Function**

This function ensures the extraction of any odours and residual vapours. After completing the cooking process and switching off the hob, the fan continues to run.

-> When the extraction system is in manual mode, pressing the switch-off key causes the device to continue operating at the minimum speed for 5 minutes; during this period, the digital display flashes showing “1”. After 5 minutes, the extraction system stops completely.

-> When the extraction system is in automatic mode, pressing the switch-off key switches the device off. It will then continue operating at the minimum speed for 5 minutes; during this period, the digital display flashes showing A . After 5 minutes, the extraction system stops completely.

It is possible to set the delayed switch-off time, and the extraction level during this period, with values different from the preset ones (described above).

✓ **Programming a delayed switch-off time:**

Touch the ⏻ ON/OFF key (1) for a few seconds; a short acoustic signal (buzzer) will sound.

On all cooking zone and extraction digital displays, the ▬ symbol will be shown.

Within 60 seconds, follow the steps below to set the desired duration.

-> Keep the keys shown in the following figure pressed simultaneously for more than 2 seconds.

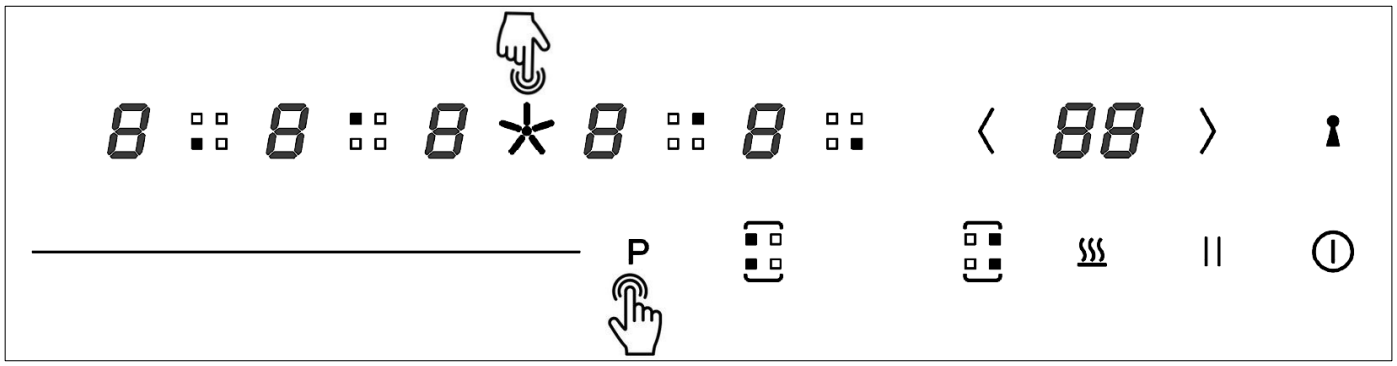

At this point, the extraction digital display (6FAN) flashes showing “5”, while the timer display (7) shows a fixed “05” (the default setting is 5 minutes); all other digital displays remain off.

-> Press the 〈 or 〉 key to increase or decrease the time.

-> Touch again (without holding) the same keys simultaneously 〈 + 〉 to save the set value.

-> All cooking zone and extraction digital displays will automatically stop showing the symbol ▬ .

-> At this point, the hob can be used normally or switched off.

Notes:

1. If during configuration the time value or the switch-off mode is not saved, exiting the procedure restores the previous settings.
2. If the time value has been saved, it remains stored even after switching off or a power interruption.
3. During configuration, pressing the OFF key ⏻ immediately resets all displays and switches the system off.

✓ **Programming the extraction level during the delayed switch-off time:**

Touch the ON/OFF key (1) ⏻ for a few seconds; a short acoustic signal (buzzer) will sound.

On all cooking zone and extraction digital displays, the ▬ symbol will be shown. Within 60 seconds, follow the steps below to set the desired extraction level.

-> Keep the keys shown in the following figure pressed simultaneously for more than 2 seconds.

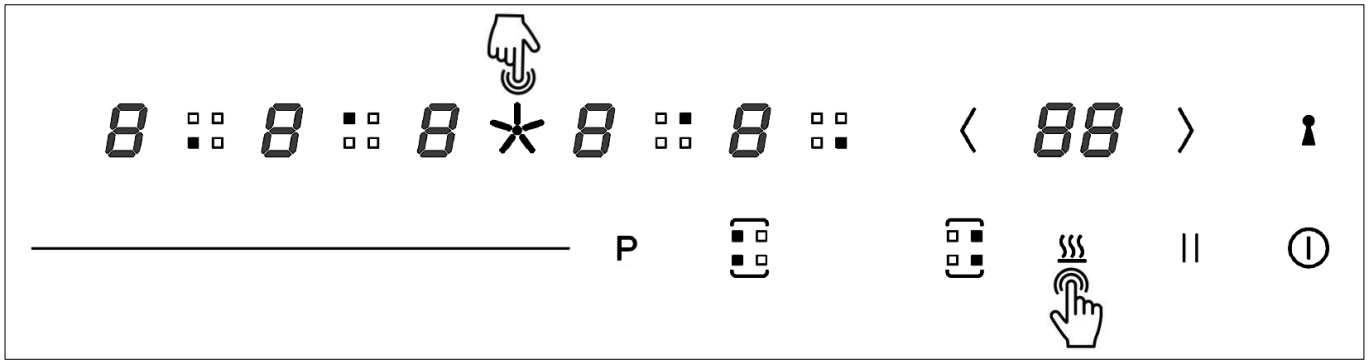

At this point, on the extraction display (6FAN) the flashing letter "P" appears, while the rightmost digit of the two-digit timer display (7) shows a fixed "1" (default setting: level 1); all other digits remain off.

-> Press the keys 〈 + 〉 to increase or decrease the extraction level (the maximum number of available levels is from 1 to P).

-> Touch again (without holding) the same keys simultaneously 〈 + 〉 to save the set value.

-> All cooking zone and extraction digital displays will automatically stop showing the symbol ▬ .

-> At this point, the hob can be used normally or switched off.

Notes:

1. If during configuration the levels or switch-off mode are not saved, exiting the procedure will result in loss of all settings.
2. If the level has been saved, it remains stored even after switching off or a power interruption.
3. During configuration, pressing the OFF key immediately resets all displays and switches the system off.

➢ **<u>Extraction timer</u>**

It is possible to set an extraction timer similar to that of the cooking zone following the same operating procedures as the induction hob (see chapter "**<u>Cooking Zone Switch-Off Timer</u>**").

The function can also be activated even if all cooking zones are switched off.

➢ **Filter cleaning alert**

This function is programmed to alert to the fact that maintenance is due:

Grease filters: every 30 hours

Long-Life odour filter: every 120 hours

It is possible to deactivate this function following the procedures indicated below.

The odour filter warning will also be displayed even if the appliance is not installed in filtering mode: in this case, proceed with normal cleaning of the grease filter and reset the warning.

Activation / Deactivation:

Touch the ⏻ ON/OFF key (1) for a few seconds; a short acoustic signal (buzzer) will be emitted. On all cooking zone and extraction digital displays, the ▬ symbol will be shown. Within 60 seconds, follow the steps below to activate or deactivate the function.

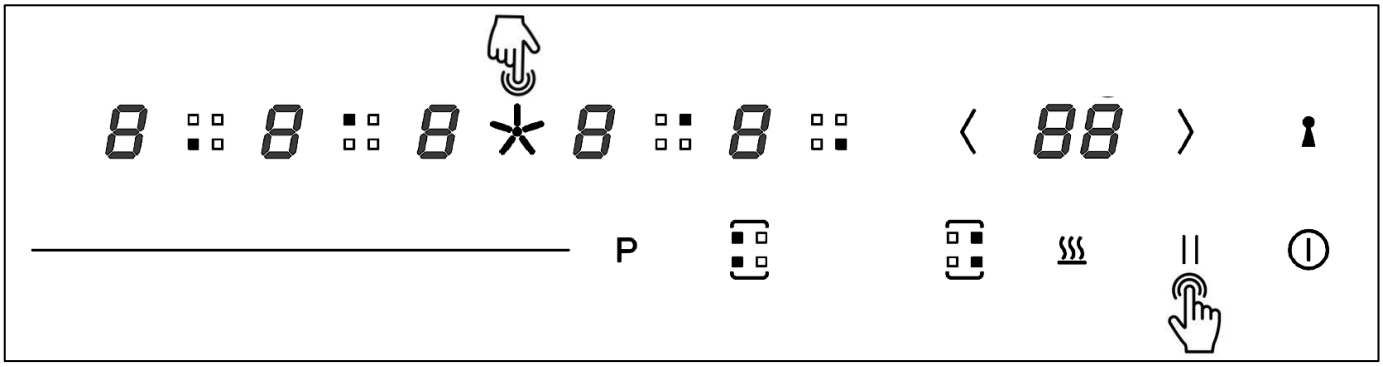

At this point, on the extraction display 8 ✳ (6FAN) the number “5” flashes, while the rightmost digit of the two-digit timer display (7) shows “1” 〈 88 〉

(default value indicating the function is active); all other digits remain off.

-> Press the key 〈 or key 〉 to change the setting; selecting “0” deactivates the function (only values 0 = deactivated and 1 = activated are allowed).

-> Touch again (without holding) the two keys 〈 + 〉 simultaneously to save the set value.

-> All cooking zone and extraction digital displays will automatically stop showing the ▬ symbol.

-> At this point, the hob can be used normally or switched off.

✓ **Grease Filter**

During operation, the system accumulates the total operating time of the extraction system.

When the cumulative extraction operating time exceeds 30 hours, the grease filter reminder function is activated: two horizontal dashes flash on the digital displays of the cooking zones 3RL and 3RR , while the acoustic signal emits a warning for 30 seconds, after which it stops; subsequently, the display remains switched on .

The warning remains active until the user simultaneously presses the selection keys of the cooking zones 2RL and 2RR for reset:

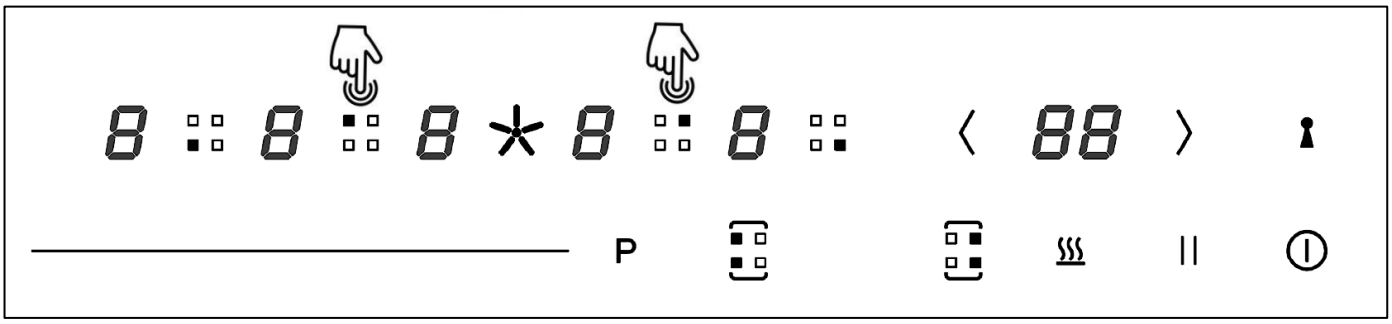

At this point, the two horizontal dashes disappear from the displays of the cooking zones 3RL and 3RR, the system returns to the normal display, the indicators stop flashing and switch off; furthermore, the cumulative timer is reset and counting resumes at the next start of the extraction system.

Notes:

1. The acoustic signal is emitted only at the first appearance of the warning; subsequently, only the visual warning will be displayed.
2. When the filter warning is active, the extraction display shows only the warning information and not the normal operating settings; however, the actual operation of the appliance remains unchanged.

Long-Life Odour Filter

During operation, the system accumulates the total extraction operating time.

When the cumulative extraction operating time exceeds 120 hours, the Long-Life odour filter reminder function is activated: on the cooking zone digital displays 3RL and 3RR two vertical lines flash, while the acoustic signal emits an alert for 30 seconds, after which it stops; subsequently the display remains active

The warning remains active until the user resets it by simultaneously pressing the cooking zone selection keys 2RL and 2RR:

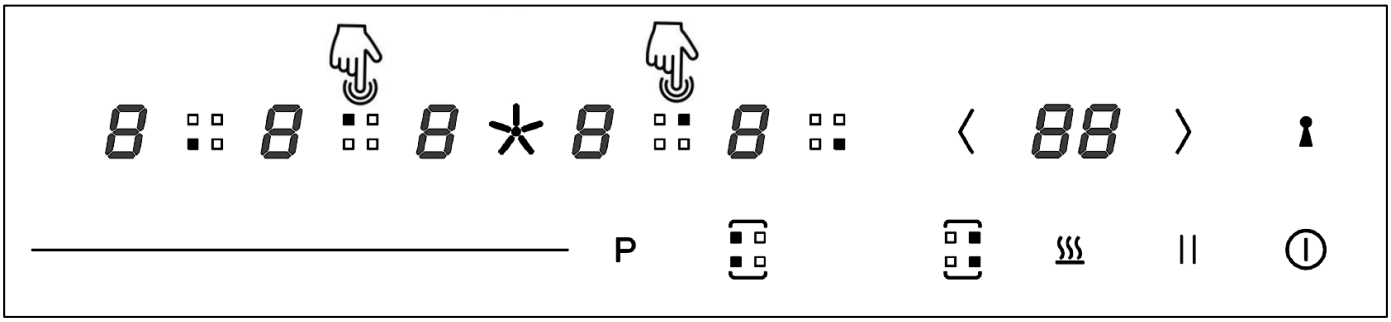

At this point, the two vertical lines disappear from the cooking zone displays 3RL and 3RR, the system returns to normal display, the indicators stop flashing and switch off; furthermore, the cumulative timer is reset and counting restarts at the next motor start.

Notes:

1. In actual use, even in the event of a complete power disconnection or system restart, the cumulative motor operating time stored in the control board chip cannot be interrupted, suspended or reset. Manual reset is possible only by simultaneously pressing the cooking zone selection keys 2RL and 2RR; all other operations are prohibited. In addition, the previous counting status must be retained in memory.
2. When the Long-Life odour filter warning is active, the extraction display shows only the warning message symbol and not the normal operating modes (as the display is dedicated to alarm indication); however, the actual operation of the appliance remains unchanged.
3. The acoustic signal is emitted only at the first appearance of the warning; subsequently only the visual indication is shown.

V MAINTENANCE AND CLEANING

⚠	**DANGER - Electrical shock hazard.** Before any intervention, disconnect the appliance from the mains. ->Ensure that the appliance is completely disconnected from the power supply before carrying out any maintenance or intervention. (Fig.2.1- Fig. 2.2 SAFETY INSTRUCTIONS AND WARNINGS chapter).

V.1 CLEANING THE EXTRACTOR INDUCTION HOB

Turn off the appliance before cleaning it.

⚠ **WARNING - Burn hazard.** Do not clean hot glass due to burn hazard. ->Wait until the glass has cooled down completely before cleaning the appliance.

Do not clean the hob if the glass is too hot as there is a risk of burns.

Remove light stains with a cloth dampened with dish detergent diluted in a little water. Then rinse with cold water and dry the surface thoroughly.

Highly corrosive or abrasive cleaners and cleaning equipment that can cause scratches should be strictly avoided.

Never use pressure or steam appliances.

Do not use objects that could scratch the ceramic glass.

Make sure the pot is dry and clean. Make sure there are no specks of dust on the glass ceramic hob or on the pot. Sliding rough pans will scratch the surface.

⚠ **CAUTION - Material damage hazard.** Spills of sugar, jam, jelly or similar substances must be removed immediately. ->This will prevent damage to the surface.

⚠ **WARNING - Chemical hazard.** Use of certain cleaning chemicals is prohibited. ->Refer to the list below and do not use the listed products, as they may damage the glass surface and cause hazardous chemical reactions.

Products containing chlorides, especially those containing hydrochloric acid;
Products based on halides;
Products based on hydrogen peroxide;
Bleaches based on hypochlorous acid;
Aggressive products containing acids;
Detergents containing abrasive powder;
Silver cleaning products;
Detergents whose chemical composition is unknown;
Abrasive pads, brushes or discs;
Rough cloths or rough paper;
Tools that have previously cleaned other metals or alloys.

Ordinary cleaning

Do not let dirt accumulate on the external and internal surfaces of the appliance.

Routine cleaning must be carried out before an excessive accumulation of dirt is created which can cause abrasive phenomena.

Before carrying out the washing operations, it is necessary to remove any dust particles by blowing or suctioning them, in order to avoid rubbing on the surface.

Where water has been used as a means of cleaning or rinsing, especially in areas with a significant presence of limescale, it is advisable to dry the surface to prevent the appearance of stains.

To avoid contamination caused by iron particles, make sure that the tools chosen for cleaning have not been used previously on other metals or alloys.

Materials for cleaning stainless steel products must be exclusively reserved for this purpose.

Particular care must be paid to the grease filter, which has the function of retaining the grease particles contained in the vapours, and to the tray below, which has the function of collecting the grease that could drip from the grease filter, the condensation, or any liquids accidentally spilled into it through the central grille.

The central grille, the grease filter and the condensate collection tray can be washed:

-> by hand, using hot water and a neutral detergent;

-> in the dishwasher, using mild or eco-friendly detergent tablets/liquids (aggressive multi-purpose tablets may oxidise the aluminium), at a temperature not exceeding 50°C.

The grease filter must be washed when the relevant warning appears or at least once a month (as described above). The filter may become discoloured after a few washes. This is normal and does not mean it has lost its effectiveness.

To perform maintenance on the grease filter and the tray underneath, it is essential to remove them from the appliance.

To remove the grease filter and the tray, proceed as shown in Fig. 5.1.1:

Operate from the upper side of the hob (1)

-> Remove the central grille (2)

-> Grip the grease filter by the knob and remove it (3)

-> Remove the condensate collection tray (4)

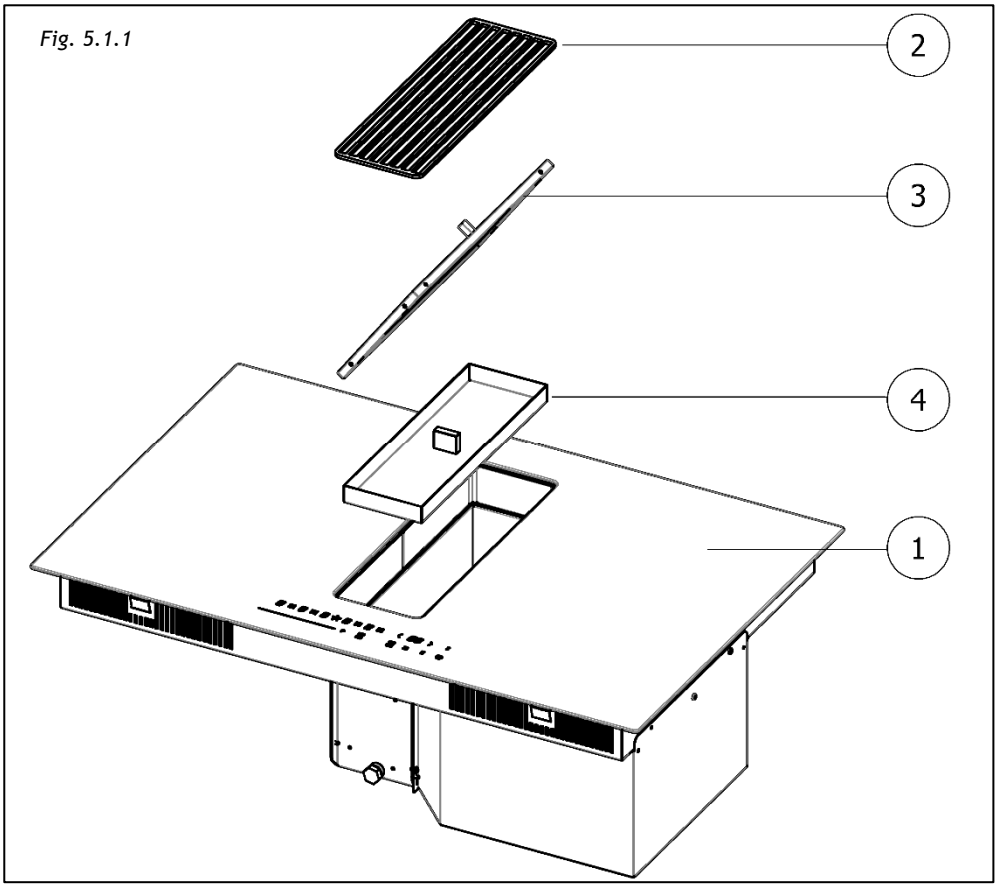

Fig. 5.1.1

After performing these operations, all the components that have just been removed can be cleaned. After cleaning, the components must be dried and finally repositioned by carrying out the operations indicated above (Fig. 5.1.1) in reverse order.

The Long-Life odour filters, **if present**, have the function of retaining unpleasant odours deriving from cooking and must be regenerated when the relative warning appears.

It does not have to be replaced frequently, must be regenerated when the relevant warning appears or, at least, every 3-4 months.

To regenerate the Long-Life odour filter it must be removed from the appliance.

To remove the Long-Life odour filters, proceed as shown in Fig. 5.1.2:

-> Operate from the upper side of the hob (1)

-> Remove the central grille (2)

-> Grip the grease filter by the knob and remove it together with the Long-Life odour filter attached to it (3)

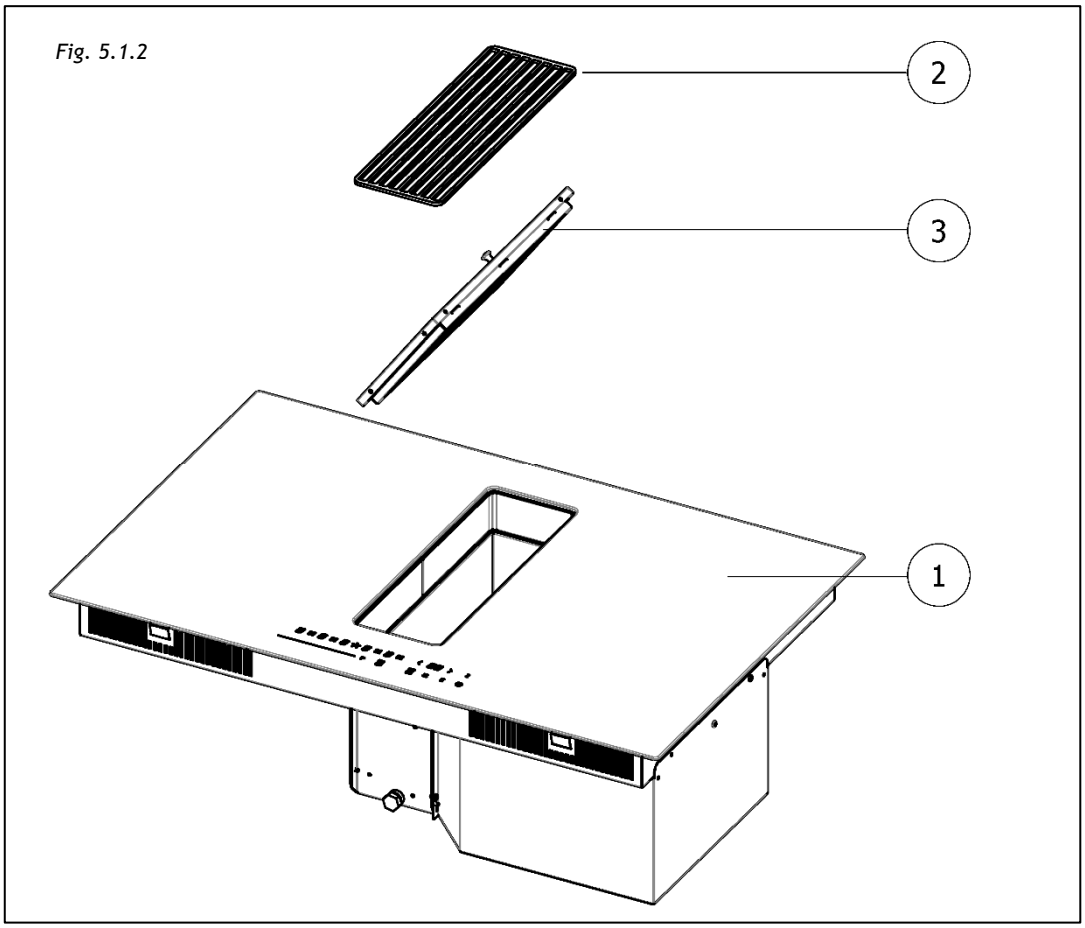

Fig. 5.1.2

To regenerate the Long-Life odour filter, simply remove the metal grease filter and slide the frame enclosing the odour filter towards the rear (Fig. 5.1.3). Take the frame including the Long-Life odour filter and regenerate it (Fig. 5.1.3-A).

Fig. 5.1.3

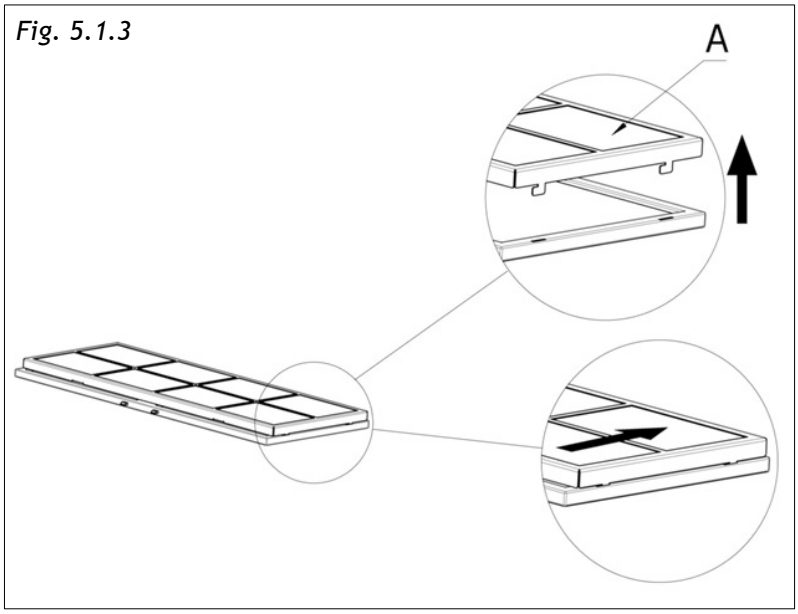

Regenerate it by a normal washing cycle in the dishwasher at about 70°C without any type of detergent, followed by drying in the oven for 30 minutes at 70°C. To keep its efficiency high, it is recommended to replace the Long-Life filter after 6/8 regeneration cycles.
After 6/8 regeneration cycles, the Long-Life odour filter and the frame that encloses it must be replaced.

To install a new Long-Life odour filter, remove the metal grease filter, place the new Long-Life odour filter on top and slide it to hook it to the metal filter.
Reinstall the grease filter.
The filter must be requested to the manufacturer.

The appliance is equipped with a **safety cap** to empty any liquids accidentally spilled into the condensate collection tray, but which have exceeded its capacity. To do this, remove the cap under the hob, being sure to place a container first, under and aligned with the cap itself, to collect any liquids present (see Fig. 5.1.4).

Fig. 5.1.4

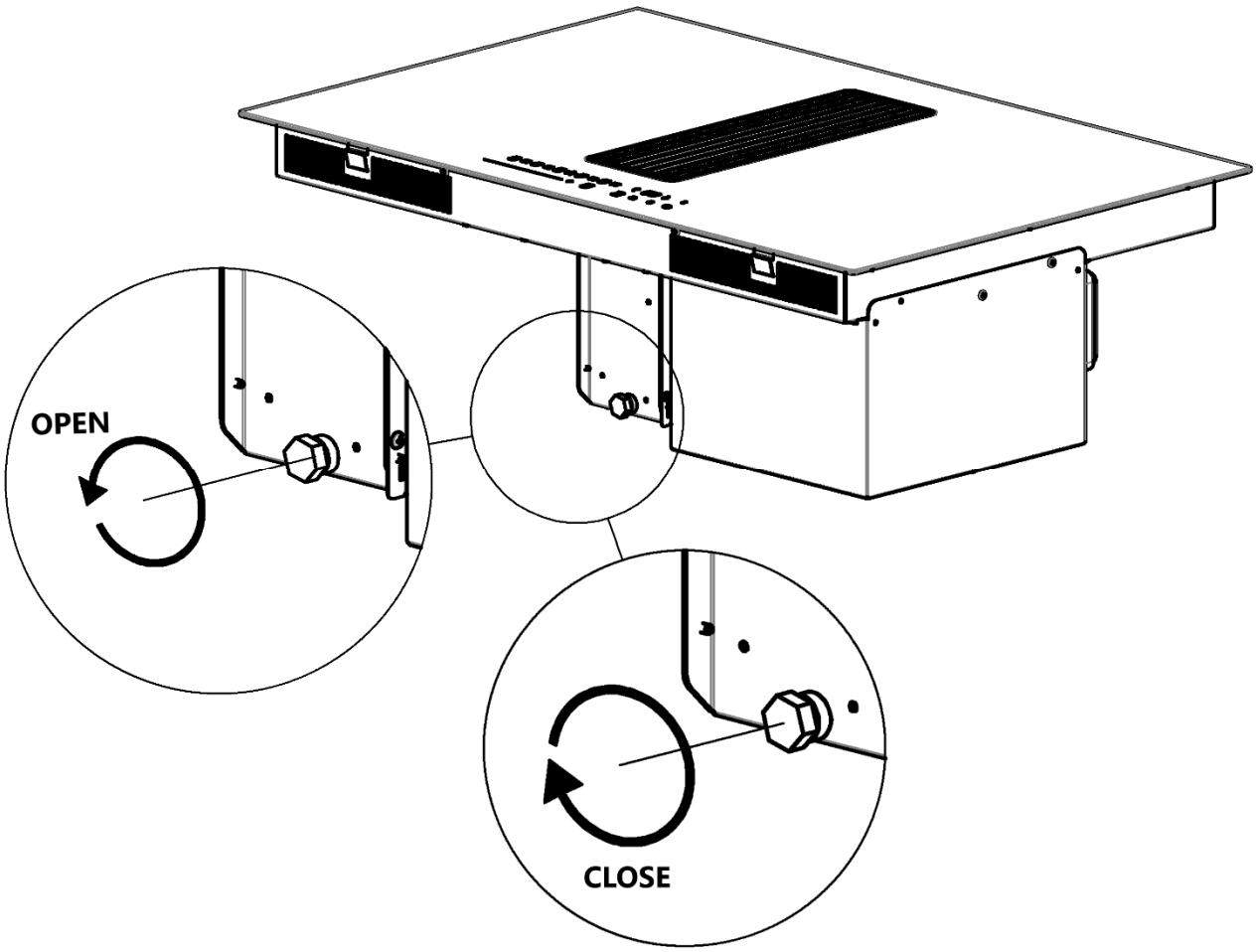

VI TROUBLESHOOTING

⚠ **WARNING - Service restriction.** During the warranty period, repairs may only be carried out by authorised After-Sales Assistance Service. ->Do not attempt to repair the appliance yourself; all repairs must be performed by authorised service personnel.

⚠	**DANGER - Electrical shock hazard.** Before any intervention, disconnect the appliance from the mains. ->Ensure that the appliance is completely disconnected from the power supply before carrying out any maintenance or intervention. (Fig.2.1- Fig. 2.2 SAFETY INSTRUCTIONS AND WARNINGS chapter).

▪ ⚠ **DANGER - Electric shock hazard.** Unauthorised interventions and repairs may cause electric shock or short circuit. -> Do not perform any repairs or interventions yourself. These tasks must be carried out only by authorised technicians.

▪ In the event of small problems, you can try to resolve the problem by following the tips in the user instructions.

▪ The removal of faults or complaints caused by incorrect use or installation of the appliance will not be covered under warranty. The repair costs will be borne by the user.

VI.1 ERRORS / TROUBLESHOOTING

The hob is programmed to provide dedicated error codes for quick and efficient troubleshooting. The Timer display (7) 88 and the cooking zone displays (3FL 8 and 3FR 8) show the error codes listed in the table shown in Fig. 6.1.1.

Notes:

1. Non-recoverable error code: if the error code is displayed only on individual cooking zones, it does not affect the normal operation of the other zones. The error code remains displayed until the system is switched off. When the error occurs, a 30-second acoustic signal is emitted.
2. Recoverable error codes: if the error code is displayed only on individual cooking zones without affecting the normal operation of the other zones, a 30-second acoustic signal is emitted when the error occurs. After 30 seconds, the signal stops and the symbol ▬ will be displayed on all digital displays of the cooking zones and the extraction system. If normal operation resumes during the acoustic signal, the cooking zone continues to operate.
3. In “Bridge” operating mode, if an error code is detected on one zone of the two cooking zones, both zones stop simultaneously.
4. Display priority: the error code has display priority.

Fig. 6.1.1

Error Codes Table

Fault type	Timer Display 7	Cooking Zone Display 3FL	Cooking Zone Display 3FR	Cooking Zone Display 3FR	Cooking Zone Display 3FR	Auto-matic fault reco-very	Possible Cause	Troubleshooting
No pan detected	/	U	U	U	U	YES	No pan or unsuitable pan	Place suitable cookware on the cooking zone.
Power board fault or communi-cation error	F1	E	E	E	E	NO	Communicati on error between the control board and the main board	1. The connection cable between the main board and the control board is not correctly connected or is damaged; 2. Main board power supply malfunction; replace the power supply module; 3. Main board faulty or damaged; replace it.
Cooking zone NTC sensor fault	F3	E	E	E	E		Cooking zone temperature sensor fault	Replace the cooking zone temperature sensor
GBT NTC sensor fault	F4	E	E	E	E		IGBT temperature sensor fault	Replace the main board
Cooking zone NTC sensor discon-nection protection	E5	E	E	E	E		Cooking zone temperature sensor fault	Replace the cooking zone temperature sensor
Key pressed for more than 10 seconds	ER/03 Alter-nating	/	/	/	/	YES	Water on the glass surface above the control panel or incorrect pan positioning	Clean the control panel
Cooking zone overheating	E1	E	E	E	E		Excessive ceramic glass temperature	Restart after the induction hob has cooled down
IGBT overheating	E2	E	E	E	E		IGBT overheating	Restart after the induction hob has cooled down
Overvoltage protection	E3	E	E	E	E		Abnormal supply voltage (too high)	Check the correct operation of the electrical supply
Undervoltage protection	E4	E	E	E	E		Abnormal supply voltage (too low)	Check the correct operation of the electrical supply

VI.2 ASSISTANCE SERVICE

Before contacting the Assistance Service it is important to:

-> Check if the problem can be resolved by consulting the error table in the "Errors/Troubleshooting" paragraph.

-> Switch the appliance off and on again (ON/OFF) to make sure that the problem has been resolved.

Finally, if after carrying out the above checks the error signals persist, contact the Assistance Service.

VII DECOMMISSIONING

VII.1 DECOMMISSIONING

Decommissioning means the definitive shutdown and dismantling of the appliance.

After decommissioning, the appliance can be incorporated into another unit, resold privately or disposed of.

⚠	**DANGER - Electric shock hazard.** To put it out of service, it is necessary to switch off the appliance and disconnect it from power supply. ->Refer to Fig. 2.1-2.2 SAFETY INSTRUCTIONS AND WARNINGS chapter.
⚠	**DANGER - Electric shock hazard.** Only specialist personnel are permitted to disconnect electrical lines. ->Do not attempt to disconnect electrical connections yourself; this operation must be carried out by qualified technicians only.

VII.2 DISASSEMBLY

Disassembly requires that the device is accessible for disassembly and has been disconnected from the voltage supply.
To do this, proceed as follows:

- Loosen the screws and fixing brackets
- Remove any silicone sealants
- Pull the hob out from above

VII.3 PROTECTING THE ENVIRONMENT

The packaging materials are environmentally-friendly and recyclable.
The electronic devices consist of materials that are recyclable but sometimes harmful for the environment, but necessary for the correct functioning and safety of the appliance.

VII.4 DISPOSAL

This appliance is marked in accordance with the European Directive 2012/19/EC, Waste Electrical and Electronic Equipment (WEEE).
The symbol on the product or on the packaging indicates that the product must not be treated as normal household waste, but must be taken to the appropriate collection point for the recycling of electrical and electronic equipment.
By ensuring that this product is disposed of correctly, you will help prevent potential negative consequences for the environment and for human health. For detailed information about recycling this product, contact your council, your local waste collection service or the store where you purchased the product.

VIII REFERENCED TECHNICAL STANDARDS

This appliance has been designed and tested in accordance with the following standards:

EN/IEC 60335-1 (GENERAL); EN/IEC 60335-2-6 (SPECIFIC INDUCTION HOB);

EN/IEC 60335-2-31 (SPECIFIC HOOD, DOWNDRAFT AND ASPIRATION HOB);

EN/IEC 62233 (EMF ELECTROMAGNETIC RADIATION, LVD);

EN/IEC 61591 (HOOD PERFORMANCE);

EN/IEC 60704-1; EN/IEC 60704-2-13; EN/IEC 60704-3; ISO 3741 (NOISE);

EN 50564 - IEC 62301 (STANDBY CONSUMPTION);

EN 60350-2 (INDUCTION HOB PERFORMANCES);

EN 55014-1 EN 55014-2 EN/IEC 61000-3-3 EN/IEC 61000-3-12 (EMC).

GALVAMET S.r.l. UNIPERSONALE - Viale dell'Industria, 10 – 35014 Fontaniva (PD) – Italy
Tel. +39 049 5942144 – Fax +39 049 5940061 - e-mail: info@galvamet.it - web: www.galvamet.it

395.932.1